ORDER NO. VRD8903M614

Service Manual

Video Cassette Player

Operating Instructions
Mechanical Adjustment Procedures
Electrical Adjustment Procedures
Block Diagrams
Schematic Diagrams
Circuit Board Diagrams
Exploded Views
Replacement Parts List

Panasonic S-VHS VHS PAL 625 Hi-Fi

AG-7510 -A -B -E -EP

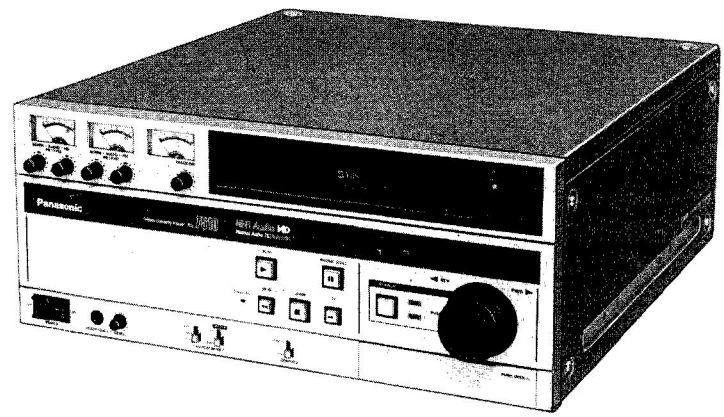

SPECIFICATIONS

ITEM	SPECIFICATION	ITEM	SPECIFICATION
Power	Source: AC 110/120/220/240 V (selectable), 50~60 Hz	Audio	Head: Normal Audio/Control: 1 stationary head HD Audio: 2 rotary heads (35 μm)
	Consumption: Approx. 55 W Approx. 60 W (with AG-A750)		Track: 2 tracks (Normal-stereo), 2 channels (HD sound-stereo)
Video	Head: 2 rotary heads, helical scanning system 49 μm (NOR), 70 μm (SS)		Output Level: LINE OUT (XLR): +4, 0, −6 dBs, 50Ω balanced AUDIO MONITOR (phono): 0 dBV, 600Ω unbalanced HEADPHONES: −60 dBV~−20 dBV, 8Ω unbalanced
	Luminance: FM azimuth recording		Frequency Response: Normal: 50 Hz~12 kHz HD Sound: 20 Hz~20 kHz
	Colour signal: Converted subcarrier phase shift recording		Dynamic Range: HD Sound: 90 dB
	Input Level: Composite sync (BNC): 4.0 Vp-p (negative pulse), 75Ω unbalanced Capstan override (PHONO): 1.0~10 V		Signal-to-Noise Ratio: 48 dB (Normal NR ON)
	Output Level: VIDEO OUT (BNC): 1.0 Vp-p 75Ω unbalanced S-VIDEO OUT (4 P): Y; 1.0 Vp-p 75Ω unbalanced C; 0.3 Vp-p (burst level) 75Ω unbalanced DUB OUT (7 P): Chroma level; 0.9 Vp-p, 1 kΩ unbalanced Luminance level; 1.0 Vp-p, 1 kΩ unbalanced DOC OUT (BNC): 0.5 Vp-p, 75Ω unbalanced	Time Code	Output Level (phono): 2.4 Vp-p, low impedance unbalanced
		Television System	CCIR Standard (625 lines, 50 fields) PAL Colour Signal
		Tape Speed	23.39 mm/s (Normal)
		Tape Format	S-VHS tape, VHS tape (Tape width 1/2" (12.7 mm))
	Signal-to-Noise Ratio (VHS): B/W; 45 dB Colour; 45 dB	Playback Time	180 min, with NV-SE180E
	Horizontal Resolution: B/W; more than 400 lines (S-VHS) 300 lines (VHS) Colour; more the 400 lines (S-VHS) 240 lines (VHS)	FF/REW Time	About 3 min. with NV-SE180E

(Please see reverse side)

Specifications are subject to change without notice.
Weight and dimensions shown are approximate.

Panasonic

Matsushita Electric Industrial Co., Ltd.
Central P.O. Box 288, Osaka 530-91, Japan

(Continued from cover page)

ITEM	SPECIFICATION	ITEM	SPECIFICATION
Operating Condition	Temperature: 5°C~40°C Humidity: 35%~80%	Optional Accessories	S-Video Cable (4P) (AG-C71A...5m) (AG-C70A...3m) Dubbing Cable (7P) (AG-C65) Rack Mount Adaptor (AG-M750)
Dimention	430(W)×176(H)×453(D)mm		
Weight	Approx. 21kg		
Standard Accessories	S-VIDEO Cable (4P) (VJA0510)		

Specifications are subject to change without notice.
Weight and dimensions shown are approximate.

INTRODUCTION

This Service Manual contains all the technical information which will allow service personnel to understand and service this Panasonic S-VHS 625 video cassette player model AG-7510.
By the use of the S-VHS system, a sharp picture quality with high resolution is obtained, and advanced editing by easy operation is realized by the introduction of high reliability mechanisms. Added to the basic VHS format, these features make the AG-7510 an ideal unit for business, education, sales and training applications.

CONTENTS

OPERATING INSTRUCTIONS 2
DIMENSIONS 8

REGULAR MAINTENANCE 2-1
DISASSEMBLY PROCEDURES 2-3
1. DISASSEMBLY FLOWCHART 2-3
2. DETAILED DISASSEMBLY METHOD 2-3
MECHANICAL ADJUSTMENT PROCEDURES 2-8
1. SERVICING FIXTURES & TOOLS 2-8
2. CYLINDER MAINTENANCE PROCEDURES 2-9
3. TAPE INTERCHANGEABILITY ADJUSTMENT PROCEDURES 2-9
4. OTHER ADJUSTMENT PROCEDURES 2-15
ELECTRICAL ADJUSTMENT PROCEDURES 2-23
1. TEST & SERVICE EQUIPMENT 2-23
2. ADJUSTMENT PROCEDURES 2-23
CIRCUIT BOARD LAYOUT 2-34

BLOCK DIAGRAMS 3-1

SCHEMATIC DIAGRAMS & CIRCUIT BOARDS 4-1

EXPLODED VIEWS 5-1
REPLACEMENT PARTS LIST 5-11
1. SERVICING FIXTURES & TOOLS LIST 5-11
2. MECHANICAL REPLACEMENT PARTS LIST 5-11
3. ELECTRICAL REPLACEMENT PARTS LIST 5-13

OPERATING INSTRUCTIONS

FEATURES

1. Amorphous heads and high quality picture

Picture quality has been improved by the use of the S-VHS system and the amorphous heads. Resolution of over 400 lines and less noise are realized in the following conditions.

- FM carrier frequency: White peak; 7 MHz
  Sync tip; 5.4 MHz
- Installation of sub-emphasis circuit
- White clip level: 210 %
- Use of S-VHS tape

2. Time Code Editing

The unit allows the execution of time code editing when this unit is connected to the Editing Controller.
Synchronization is also possible at the Edit IN point by the Capstan Override Connector.

3. Dual audio channel·Dolby* NR system

Because there are two normal audio tracks, stereo or bilingual programmes can be played back. The sound quality is further improved due to the built-in Dolby NR system.

4. JOG/SHUTTLE search function using dial

A programme segment on the tape can be rapidly and accurately found by using the SHUTTLE search in which the tape speed is varied between 0 and 10 times the normal speed, or the JOG search in which the tape speed is varied in accordance with the rotational speed of the dial.

5. Field still function

This function provides attractive still pictures with minimal jitter.

6. Rack mounting possible due to front loading

The unit is a cassette tape insertion type employing front loading, hence it can be easily installed in an IEC standard 19-inch rack.

7. Editing and dubbing connectors

Special connectors designed for dubbing provide improved picture quality when dubbing or editing between video recorders.

8. Time code playback

The EBU time code can be recorded and played back on the audio CH2 track.

9. System editing

An editing system can be configured by connecting the AG-7510 and AG-7500 to an Editing Controller.

- Up to three source (playback) units can be connected simultaneously by using a Remote Search Controller (NV-A505, option).
- It is possible to configure a system by connecting the unit to the AG-A750, AG-A650, NV-A500 or NV-A960 Editing Controller (options).

* 'Dolby' and the double-D symbol are trademarks of Dolby Laboratories Licensing Corporation.
* Noise reduction manufactured under license from Dolby Laboratories Licensing Corporation.

FEATURES (CONTINUED)

S-VHS System

The S-VHS System has been designed to meet the critical demands of the Video Information Age. This system incorporates technologies that provide high resolution and excellent picture quality with the VHS Video system, which is solidly established the world over for industrial and home use.
The combination of this system with the newly developed S-VHS video cassette has enabled epoch-making progress in picture clarity and detail. The system produces a horizontal resolution of no less than 400 lines.
You can not only make playbacks of high quality pictures by using a video cassette with the S-VHS mark but also enjoy playback as before with a cassette bearing the VHS mark.

Interchangeability of Video Recorders and Cassettes

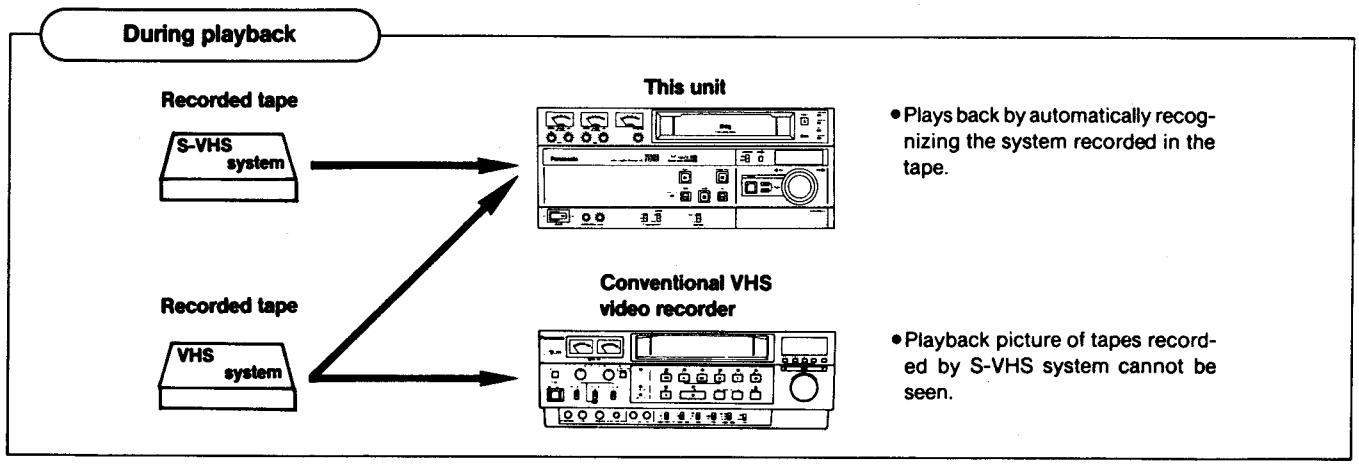

Comparison between S-VHS and VHS

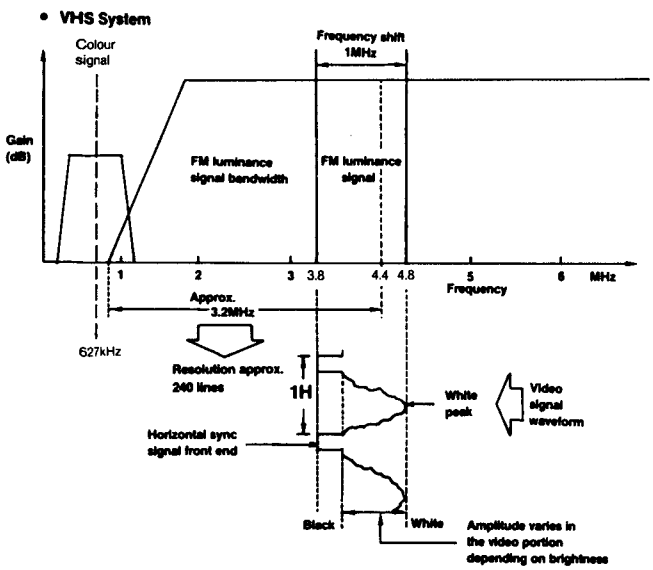

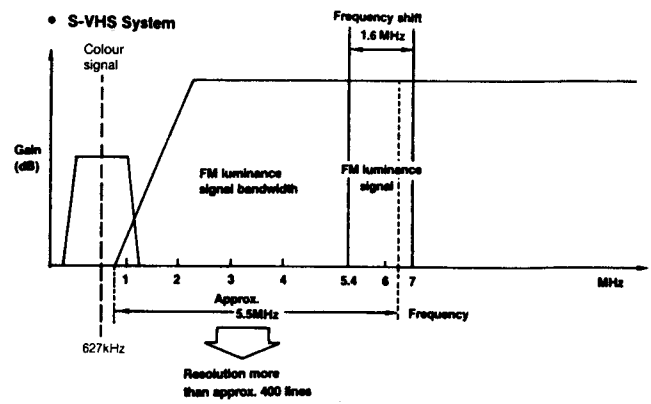

As compared with the conventional VHS system, the performance is remarkably improved as follows.

- Frequency shift: 3.8 MHz ~ 4.8 MHz to 5.4 MHz ~ 7 MHz
- FM luminance bandwidth: Approx. 3.2 MHz to approx. 5.5 MHz
- Resolution: Approx. 240 lines to more than 400 lines

However, when the band is widened, the S/N becomes inferior accordingly. To prevent this deterioration, in the S-VHS system, the following measures are incorporated.

- The sub-emphasis circuit is introduced in the preliminary stage of the conventional main emphasis circuit.
- An S-VHS tape made of newly developed magnetic material is used exclusively for the S-VHS.
- The use of the amorphous heads ensures high quality pictures.

HD (high-dynamic) System

This unit records audio using the following two formats:

- **Hi-Fi sound:** An FM format employing a dedicated rotary audio head permits high quality sound recording and reproduction.
- **Normal audio:** This is the same format as that used in a conventional video recorder.

<Compatibility with conventional recording methods>
This unit can record tapes in the conventional (normal) mode, enabling tapes recorded on it to be reproduced on a conventional machine.
The unit can also reproduce tapes recorded on a conventional machine.

❶ Independent dedicated audio head installed on rotary cylinder

The audio of a video tape which was formerly recorded using a fixed head is recorded on this unit using an audio head mounted on a rotary cylinder. The video is recorded over the audio using a dedicated video head. This completely new format is called a high-dynamic system (for creating superior sound quality).

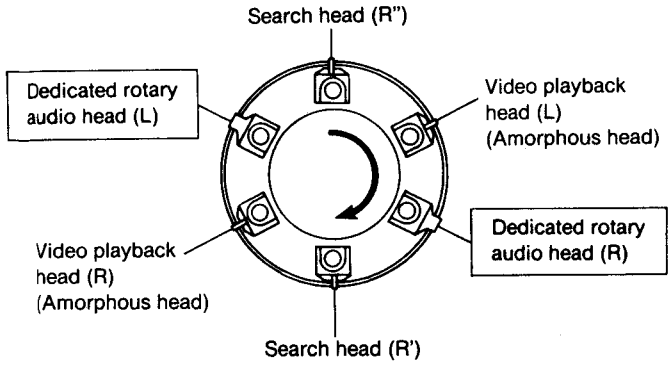

<Rear view>

❷ Use of newly developed audio processing IC

A newly developed Hi-Fi sound IC processes the audio input signals at the optimum level without deterioration. As a result, the dynamic range has been increased from the conventional value of 80 dB to 90 dB, making for impressive dynamic sound.

❸ Incorporation of switching noise reduction circuit

An electronic switching circuit and an active filter have been incorporated in the noise reduction section which is the heart of the audio circuit. Also audio capacitors and low-noise resistors are used in the level sensor section. As a result, noise which is generated when the audio head (Hi-Fi head) is switched has been greatly reduced, making for highly linear, pure, clear Hi-Fi sound.

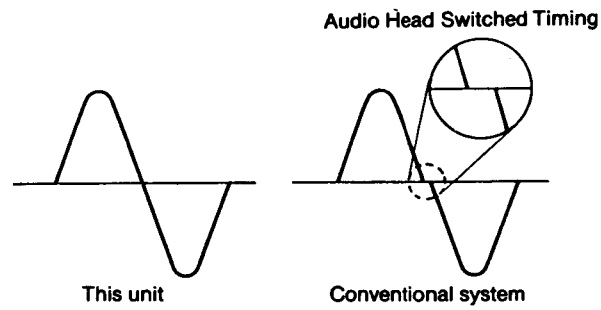

<Switching noise>

Jog/Shuttle Search

❶ Incorporates double DD reel motor

The tape runs smoothly in the forward and reverse directions, and the mechanism has good response.

❷ Variable speed playback by microprocessor control

By using the shuttle dial, the playback speed can be varied according to the angle of rotation of the dial, and by using the jog dial, the playback speed can be varied according to the direction and speed of rotation of the dial. This is useful for frame alignment when searching for the editing points.

CONTROLS AND THEIR FUNCTIONS

Front

Upper Panel

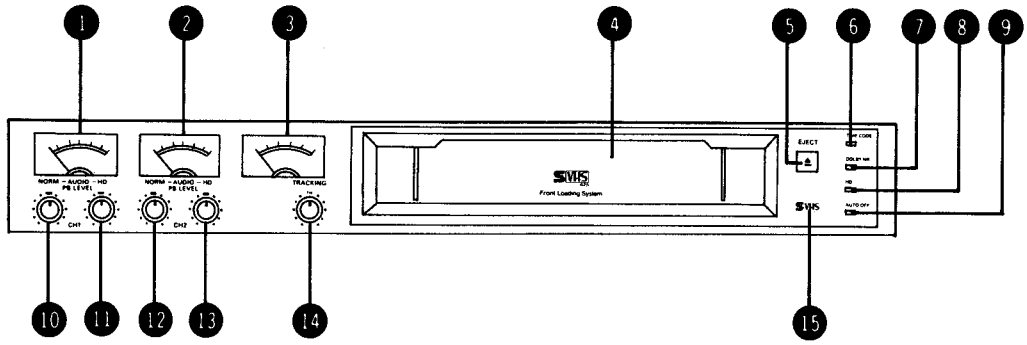

Middle Panel

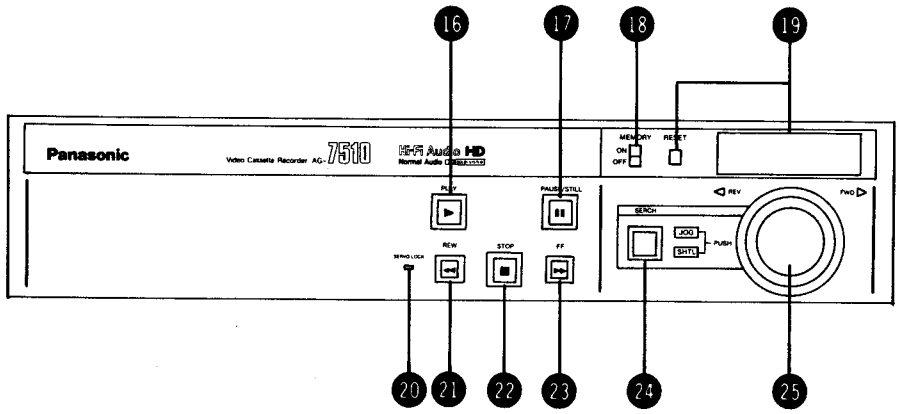

Lower Panel

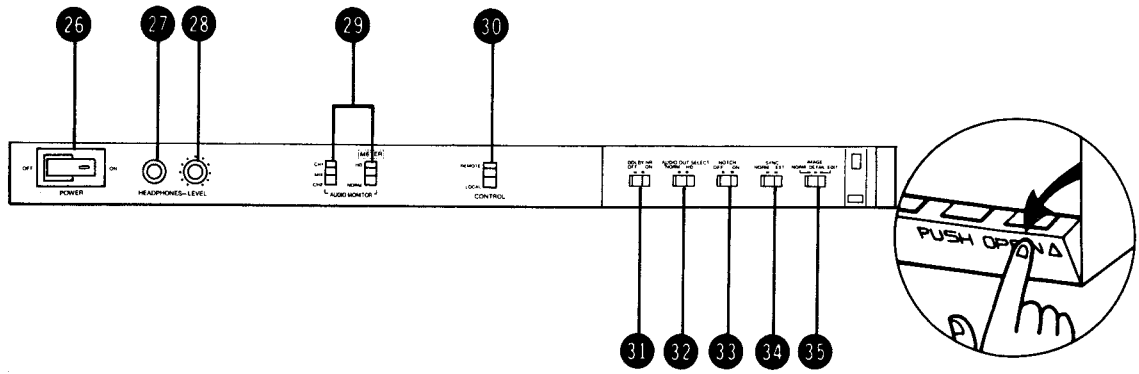

1 Audio (CH1) Level Meter
The meter indication can be switched between Normal/HD by means of Audio Monitor Selector 29.

2 Audio (CH2) Level Meter
The meter indication can be switched between Normal/HD by means of Audio Monitor Selector 29. If you set Audio CH2 Selector 4 (Rear Panel) to the "TIME CODE" side, you cannot use normal audio CH2. In this case, if you set Audio Monitor Selector 29 to the "NORM" side, the audio (CH2) level meter will indicate the existence of a time code signal if present.

3 Tracking Meter
When the unit is in the playback mode, this meter functions as a tracking meter.

4 Cassette Holder

5 Eject Button
Press this button to remove the cassette tape.

6 Time Code Lamp
This lamp lights when the Audio CH2 Selector 4 (Rear Panel) is set to the "TIME CODE" side.

⑦ Dolby NR Lamp
This lamp lights when you set Dolby NR Switch ㉛ to "ON".

⑧ HD Lamp
This lamp lights during HD Sound playback of a tape which contains HD-recorded Sound.

⑨ Auto OFF Lamp
This lamp lights if moisture condenses inside the unit. It flashes when something is wrong with the tape transport (such as tape slack). If this lamp lights or flashes, the unit will stop.

⑩ Audio (CH1) Normal Audio Level Control
Adjust the playback level of Normal Audio CH1 by turning this control while observing the meter ❶.

⑪ Audio (CH1) HD Sound Level Control
Adjust the playback level of HD Sound CH1 by turning this control while observing the meter ❶.

⑫ Audio (CH2) Normal Audio Level Control
Adjust the playback level of Normal Audio CH2 by turning this control while observing the meter ❷.

⑬ Audio (CH2) HD Sound Level Control
Adjust the playback level of HD Sound by turning this control while observing the meter ❷.

⑭ Tracking Control
When performing normal playback of a recorded tape, turn the Tracking Control until the reading on the meter ❸ reaches maximum.

⑮ S-VHS lamp
This lamp lights up when the unit plays back the tape recorded in the S-VHS mode.

⑯ Play Button/Lamp
This button is used during tape playback.
The lamp lights during playback.

⑰ Pause/Still Button/Lamp
If you press this button, the lamp will light and tape travel will stop. By pressing it once again, the lamp will go out and the tape travel will start again.
Use this button to create a still picture during playback.

⑱ Memory Switch
If you set this switch to "ON", the tape will automatically stop at the point corresponding to "0:00:00:00" on the tape counter when the unit is put in the fast forward or rewind mode.

⑲ Tape Counter/Reset Button
By pressing the Reset Button, the reading on the tape counter will become "0:00:00:00". Also, the editing point will be reset. When tape travel starts, the counter will provide an indication of the tape travel in Hours : Minutes : Seconds : Frames. When the tape goes past the "0:00:00:00" point and starts to be rewound, the indication on the tape counter will be prefixed by a minus (−) sign.

⑳ Servo Lock Lamp
This lamp lights when the servo circuit is synchronized with the reference sync signal.

㉑ Rewind Button/Lamp
Use this button when you wish to rewind the tape. While the tape is being rewound, this lamp is lit.

㉒ Stop Button/Lamp
By pressing this button, the entire unit will stop and the lamp will light.

㉓ Fast Forward Button/Lamp
Use this button to move the tape forward at high speed. While the tape is traveling forward at high speed, the lamp will be lit.

㉔ Search Button/Lamp
By pressing this button, the lamp will light and the unit will go into the search mode. By pressing this button once again during a search, the lamp will go out and the unit will revert to the normal playback mode.

㉕ Search Dial
Use this button to search for the editing points.

㉖ Power Switch
By pressing this switch "ON", power will be supplied to the unit. Also, the audio CH1, CH2, and video/tracking meter lamps will light, and the reading on the tape counter will be reset to "0:00:00:00". By pressing this switch "OFF", the power will be cut off.

㉗ Headphone Jack (1/4" phone)
If you connect 8-ohm rated impedance stereo headphones to this jack, you can monitor the audio from either CH1 or CH2, or both channels, in accordance with the setting of the Audio Monitor Selector.

㉘ Headphone Level Control
For adjusting the output level of the headphones.

㉙ Audio Monitor Selector
These switches are used for selecting the type of audio which is output from Audio Monitor Output Jack ❾ (Rear Panel) and Headphone Jack ㉗, and the channel to be monitored. The indication of Audio Level Meter ❶, ❷ can be switched between Normal/HD by means of the meter side of these selectors.

㉚ Control Selector (Remote/Local)
REMOTE: Set the switch to this position when connecting a controller to the Remote Control Connector ⑱ (Rear Panel). When the switch is in this position, the operation buttons on the unit will be rendered inoperative, and the unit will be controlled by the remote controller. Also, the counter cannot be reset. (The Stop Button and Eject Button will function, however.)
LOCAL: Set the switch to this position when using the unit independently.

Note:
When you change the setting of this switch from local to remote, the editing points will be reset.

㉛ Dolby NR Switch
By setting this switch to the "ON" position, the Dolby NR Lamp ⑦ will light up and the Dolby NR System will operate.

㉜ Audio Output Selector

NORM: Normal Audio is output from Audio Output Connectors ⑫.

HD: If HD Sound is recorded, HD Sound will be output. If HD Sound is not recorded on the tape, Normal Audio will be automatically output from Audio Output Connectors ⑫.

㉝ NOTCH Selector

Normally use the selector in the "OFF" position.

- Place this selector to "ON", when playing back S-VHS tapes recorded on other VTRs or when chrominance noise appears in the luminance signal (Y/C signal is not separated completely).
- When the tapes recorded through the S-VIDEO input connector or recorded on the AG-7500 are played back, set the selector to the "OFF" position. More clear picture can be obtained.

㉞ Sync Selector

This selector is used when playing to select one of two types of sync signals (normal or external).

㉟ Image Selector

NORM: Normally place the selector in this position.

DETAIL: More clear picture will be obtained than "NORM".
However, the S/N becomes inferior.

EDIT: Place the selector to this position when editing.

Rear

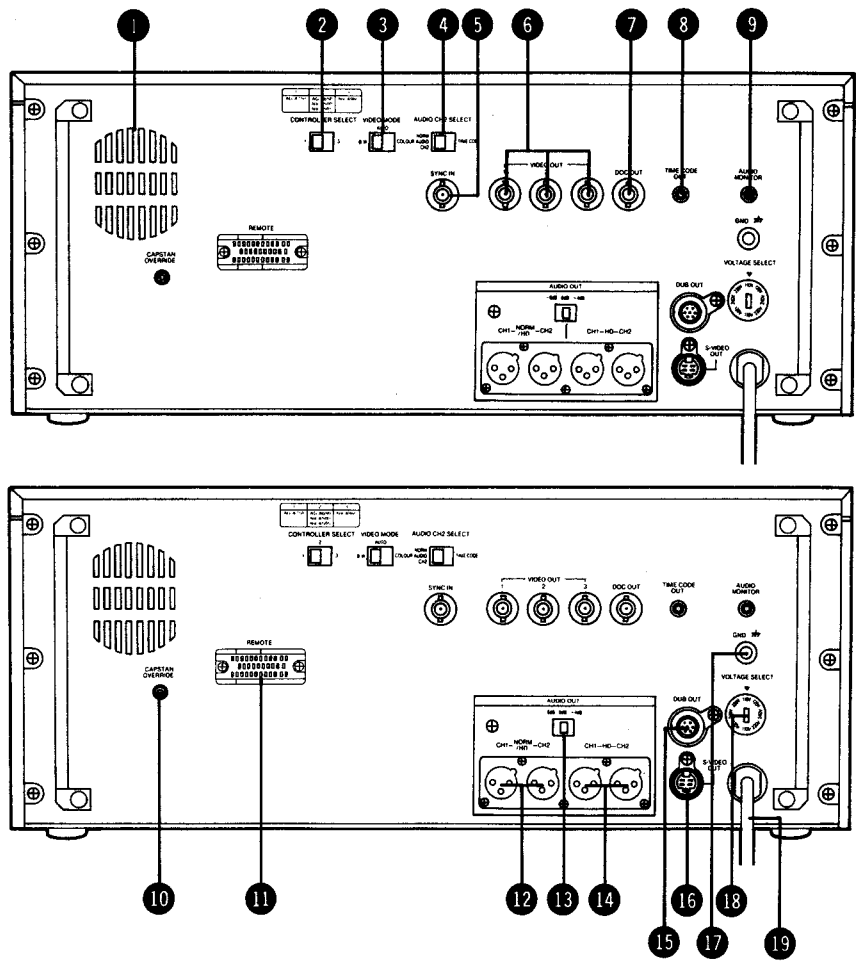

① Fan Motor

② Controller Select

When using an optional editing controller or remote controller, set this selector to a position corresponding to the controller used.

③ Video Mode Selector

Used to avoid mistaken operation with the colour/black & white automatic selector circuit.

B/W: The unit is forcibly set to black & white mode.

AUTO: Distinguishes automatically between Black & White and Colour video input signals or playback video signals.
However, depending on the signal, select either "B/W" or "COLOUR" if the automatic selector circuit does not operate properly.

COLOUR: The unit is forcibly set to colour mode.

❹ Audio CH2 Selector
When playing back a time code signal, set this switch to the "TIME CODE" side. When the selector is set to this side, you cannot use CH2.

❺ Sync Input Connector
- Connect this connector to a composite sync signal from a reference sync signal generator when synchronizing the unit with an external reference sync signal.
- To connect advance sync from TBC.

❻ Video Output Connector
Connect this to a TV Monitor, video recorder, or time base corrector.

❼ DOC Output Connector
When it is connected, a dropout detection RF signal will be output. Connect this to the DOC Input terminal of a time base corrector.

❽ Time Code Output Jack
Connect this jack to the input jack of a time code reader and play back time code signals.
Set the Audio CH2 Selector ❹ to "TIME CODE".

❾ Audio Monitor Output Jack
You can obtain the audio output selected by Audio Monitor Selector ㉙ from this terminal.

❿ Capstan Override Jack
Use this jack when connecting with the Editing Controller. Connect this jack to the CAP OVERRIDE Jack of the Editing Controller when synchronizing the capstan with the recorder (or player) during editing.

⓫ Remote Control Connector
When you wish to operate the unit from a remote location, connect the optional Remote Search Controller NV-A505 to this Connector. Alternatively, when you wish to perform editing, connect an optional Editing Controller (AG-A750, AG-A650, NV-A500 or NV-A960).

⓬ Audio Output (CH1/CH2) Connectors
Connect these connectors to audio (stereo, etc.) equipment using audio cable. You can select either Normal Audio or HD Sound using the Audio Output Selector ㉜ on the front panel.

⓭ Audio Output Level Selector
This is the selector for audio output level (−6 dBs, 0 dBs or +4 dBs).

⓮ HD Sound Output (CH1/CH2) Connectors
These output connectors are intended exclusively for HD Sound.

⓯ Dubbing Output Connector
Connect this to the Dubbing Input Connector of an editor using the optional 7P dubbing cable (AG-C65). You cannot connect this to the dubbing connector of a 3/4" VTR.

⓰ S-VIDEO Output Connector
This is a 4P output connector of separated brightness signal and colour signal.

⓱ Ground Terminal
If hum occurs, connect this terminal to the ground terminal of equipment connected to the unit.

⓲ VOLTAGE Select Switch
When using this unit, make sure that the available voltage is selected correctly, before connecting the power cord to an AC outlet.

⓳ Power Cord

DIMENSIONS

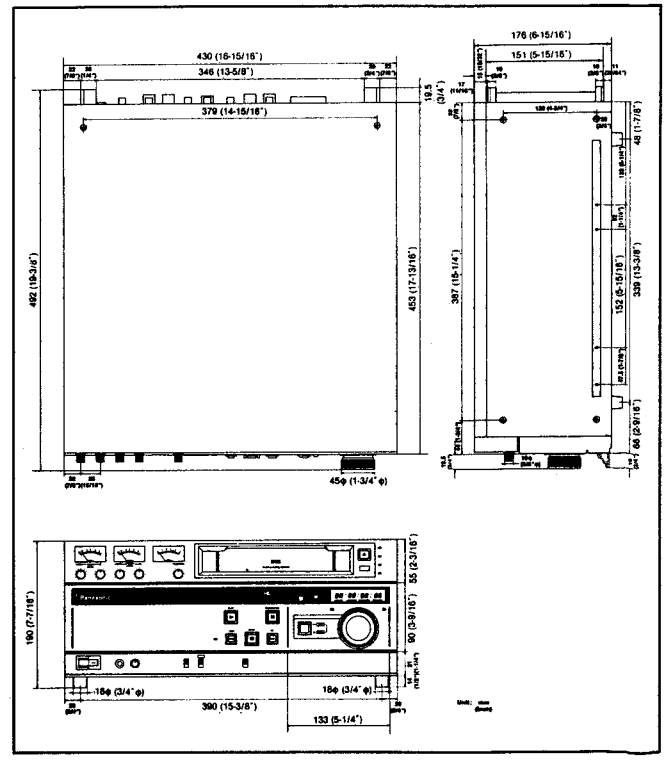

REGULAR MAINTENANCE

The purpose of periodic maintenance is to preserve the functioning of this machine throughout it's useful life. The user or service dealer should perform these maintenance regularly to ensure that maximum utility is obtained from the machine.

REGULAR MAINTENANCE IS NECESSARY

The VCP is a complicated piece of equipment. It contains many belts, rollers, heads etc., which become worn, and deteriorate as time goes by, causing trouble. Dust and dirt will also impede the proper functioning of the machine. In light of this, it is very important that overall maintenance be done according to the maintenance chart to maintain the functions of the VCP, and to avoid accidental problems. This maintenance should also be performed after any repairs are done on the equipment.

REGULAR MAINTENANCE IS RECOMMENDED

The VCP used for business applications requires particular attention for several reasons. The installation conditions and applications are not always the best. Long use times, or poor environmental conditions may adversely affect the lifespan and performance of the machine. Regular maintenance assures that the purchaser obtains the maximum value for this expenditure. Accordingly, the necessity of regular maintenance should be fully explained at the time of sale, as well as during after-sale repairs.

MAINTENANCE CHART

The following periodic maintenance is required to prolong the life of the machine.
Since the parts are keyed to the Inner Parts Location Diagram, when you replace the following parts, refer to the diagram.

	Part Name	Unit or Part No.	Hour										Page
			500	1000	1500	2000	2500	3000	3500	4000	4500	5000	
❶	Tape Transporters	——	●	●	●	●	●	●	●	●	●	●	2-11, 2-12, 2-13
❷	A/C Head	VBR0147	●	●	●	●	●	●	●	◎	●	●	2-13, 2-14, 2-15
❸	Upper Cylinder Unit	VEH0414	●	◎	●	◎	●	◎	●	◎	●	◎	2-9
❹	Lower Cylinder Unit	VEG0529	●	●	●	●	●	●	●	●	●	◎	2-9
❺	Supply Reel Table Unit	VXR0113		●		●		●		●		●	2-19
❻	Takeup Reel Table Unit	VXR0113		●		●		●		●		●	2-19
❼	DD Capstan Unit	VEM0164	●	●	●	●	●	●	●	●	●	◎	——
❽	Pressure Roller	VXG0013S	●	●	◎	●	●	◎	●	●	◎	●	——
❾	Brake Lever (L) Unit	VXZ0148				◎				◎			2-17, 2-18
❿	Brake Lever (R) Unit	VXZ0149				◎				◎			2-17, 2-18
⓫	Loading Belt (1)	VDV0122				◎				◎			——
⓬	Loading Belt (2)	VDV0135				◎				◎			——
⓭	Elevator Motor Belt	VDV0144				◎				◎			——
⓮	Reel Motor (Supply)	KFN56DB3AS				◎				◎			——
⓯	Reel Motor (Take Up)	KFN56DB3AT				◎				◎			——
⓰	Loading Motor Unit	VEM0135								◎			——
⓱	Hour Meter	VSE0036				◎				◎			——
⓲	Loading Base Unit	VXA1334		■		■		■		■		■	——
⓳	Cam Gear Section and Hyper Pressure Section (Between Metal)	——		■		■		■		■		■	——
⓴	Tension Arm Unit	VXL1739										◎	2-16, 2-17

*** NOTE:**

Symbol	Maintenance	Requirement	Remark
●	Cleaning	Freon TF, Ethyl-alcohol or Cleaning Liquid (Purchase locally)	Wipe dirt from the parts using soft cloth impregnated with Freon TF or Ethyl-Alcohol. Note: When cleaning rubber parts, avoid using excessive alcohol since it may accelerate deterioration of these parts. After cleaning with alcohol, wipe the alcohol quickly and thoroughly.
◎	Replacement	——	——
■	Greasing	Molytone Grease (MOR265)	Wipe the old grease and apply new grease.

MAINTENANCE PARTS LOCATION

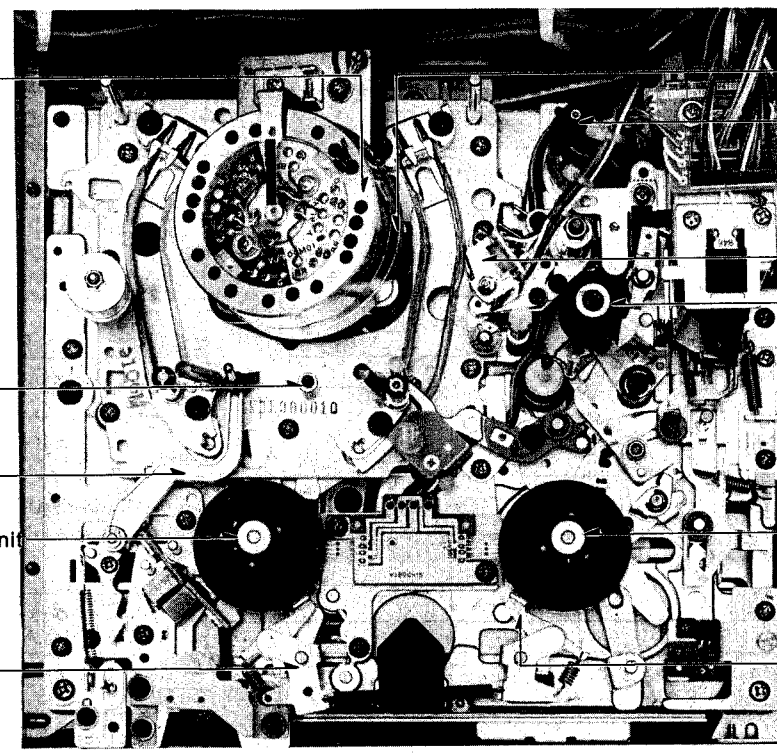

Figure 1 Top View

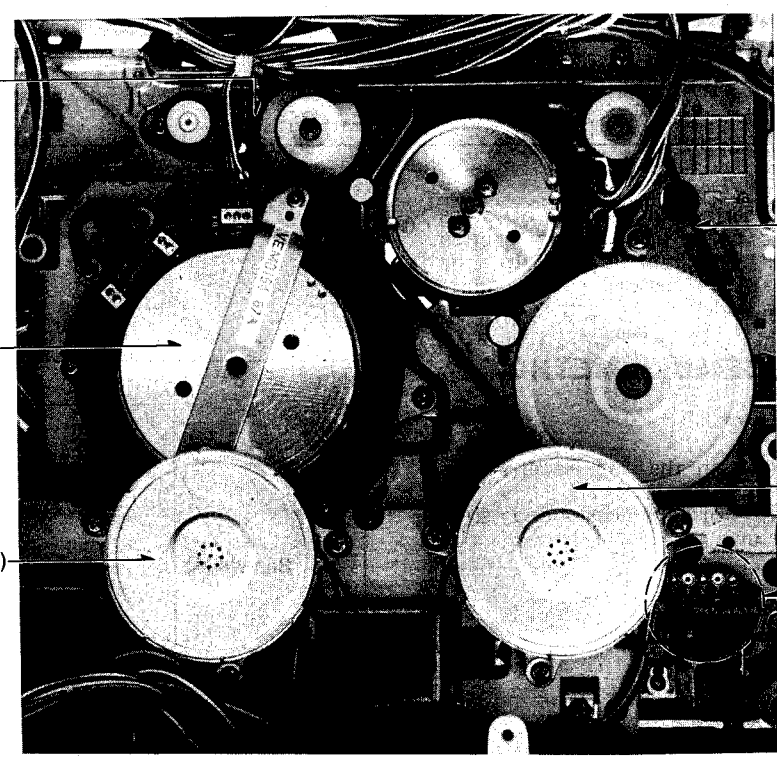

Figure 2 Bottom View

DISASSEMBLY PROCEDURES

1. DISASSEMBLY FLOW CHART

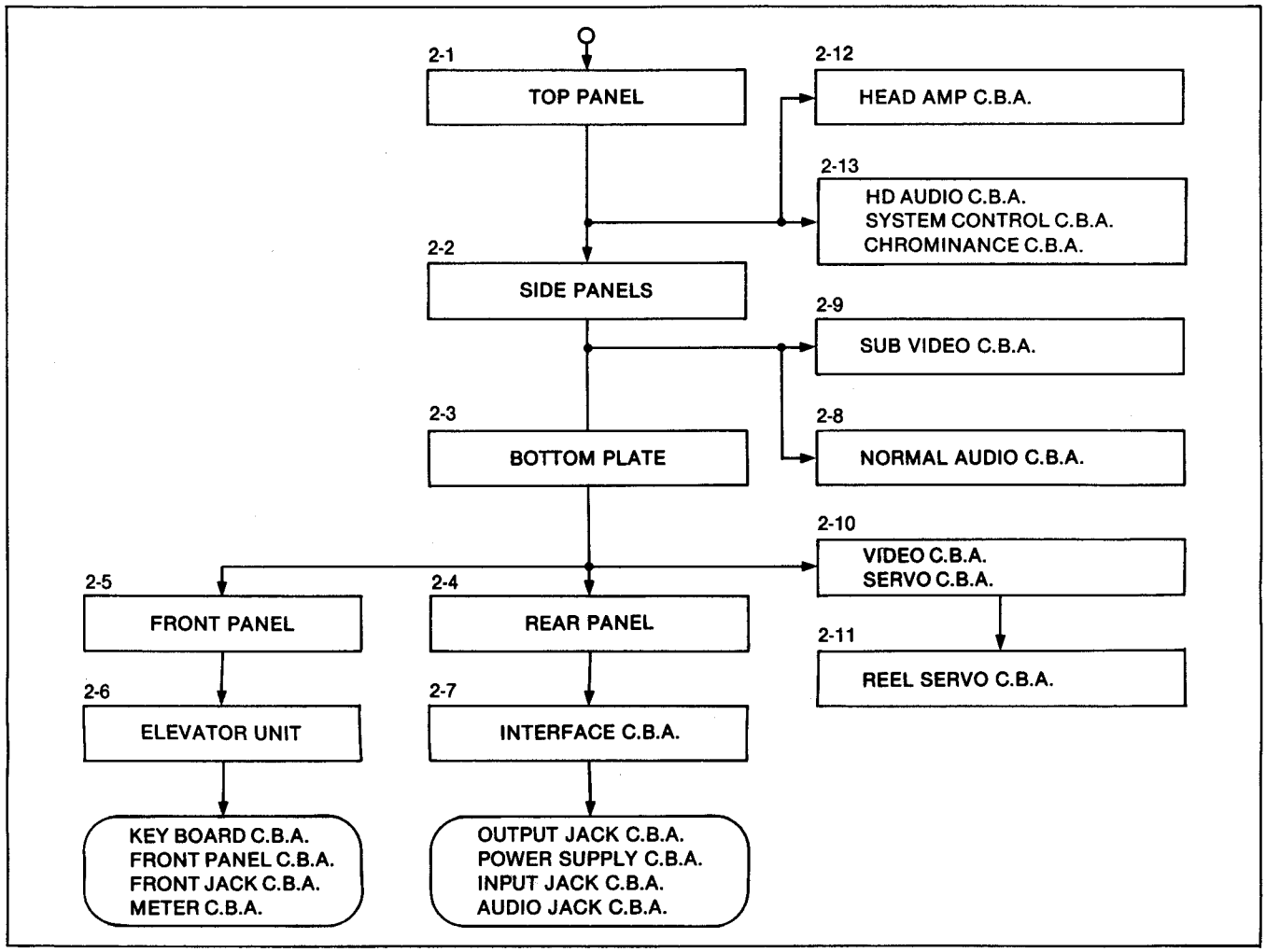

Figure D1

The above flow chart describes the order of steps for removing the cabinet parts and certain printed circuit boards in order to gain access to the items needing servicing. To reassemble the unit, follow the steps in reverse order.

2. DETAILED DISASSEMBLY METHOD

2–1. Removal of the Top Panel

1. Unscrew the 2 screws(A) on the Top Panel(Figure D2).
2. Carefully lift the rear of the case and slide it off the back of the unit.

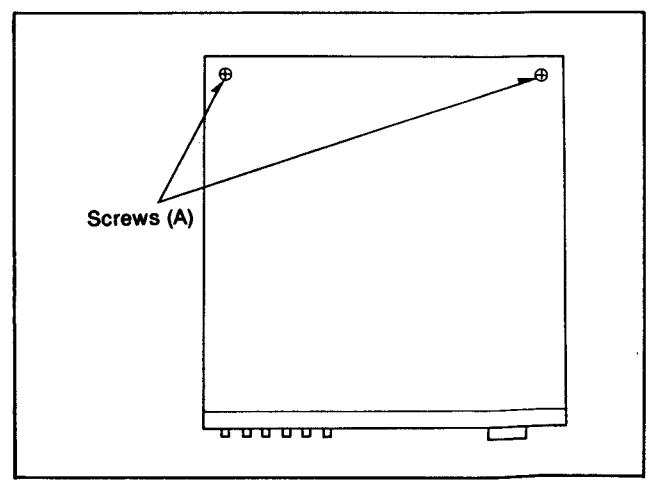

Figure D2

2–2. Removal of the Side Panels

1. Unscrew the 8 screws(B) on the Side Panels (Figure D3).
2. Lift off the Side Panels.

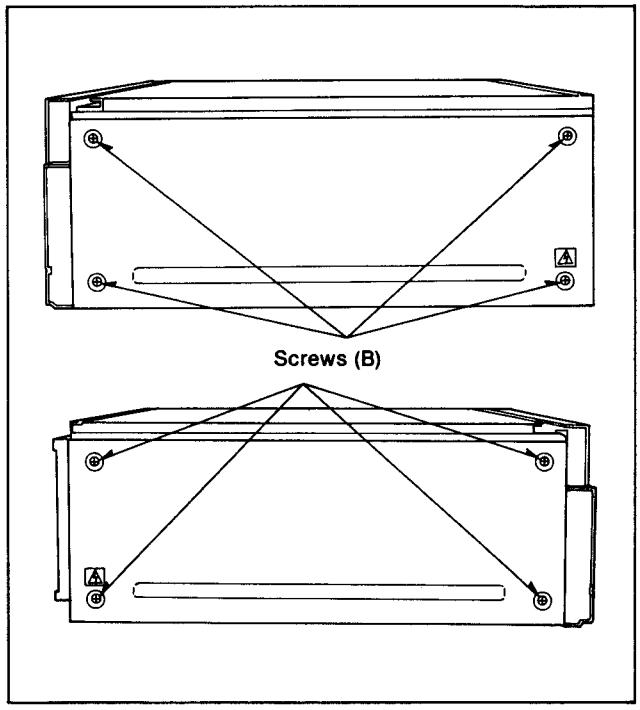

Figure D3

2–3. Removal of the Bottom Plate

1. Unscrew the 9 screws(C).
2. Lift off the Bottom Plate.

*Note: Do not remove the 4 rubber feet.

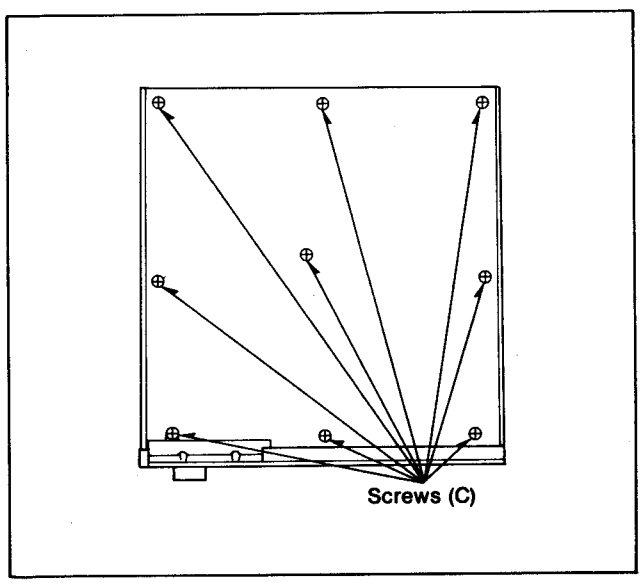

Figure D4

2–4. Removal of the Rear Panel

1. Unscrew the 6 screws(D) on the rear panel (Figure D5).
2. Lift the Rear Panel and carefully pull the panel off the unit.

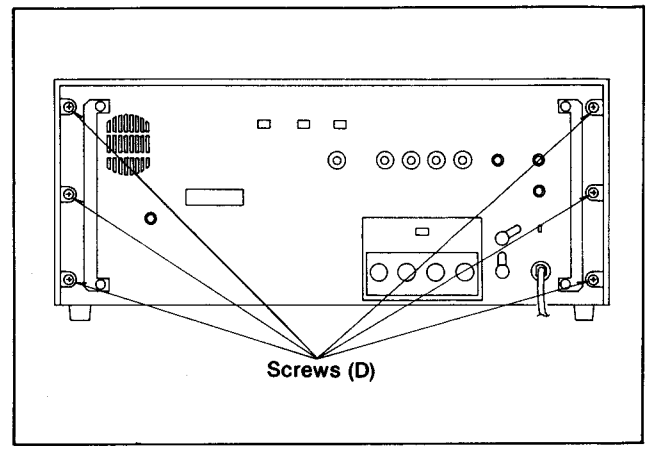

Figure D5

2–5. Removal of the Front Panel

1. Unscrew the 4 screws(E) on the side angles and the screw(F) on the bottom of the Front Panel (Figure D6 and Figure D7).
2. Lift the Front Panel and carefully pull the panel off from the unit as shown in Figure D8.

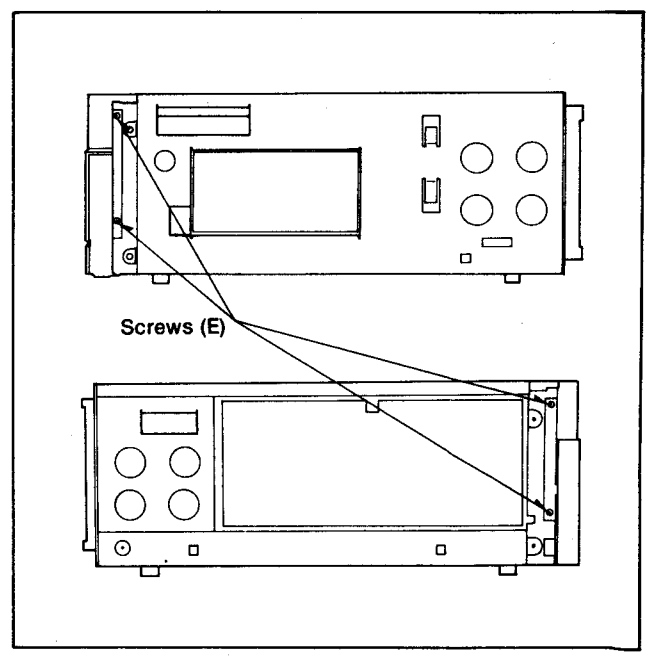

Figure D6

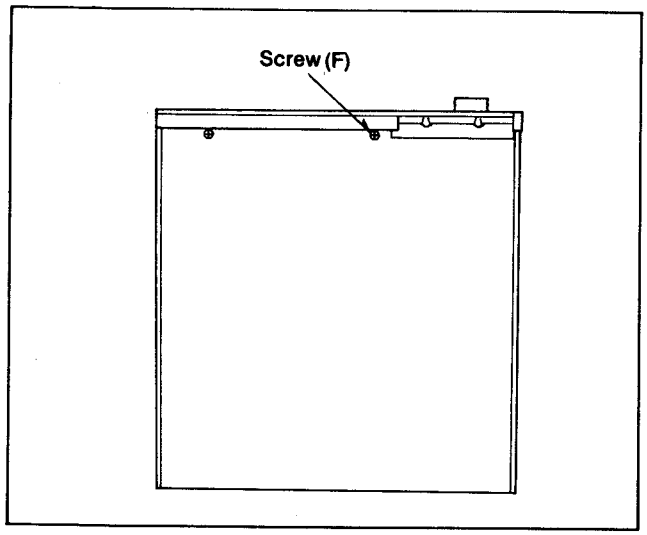

Figure D7

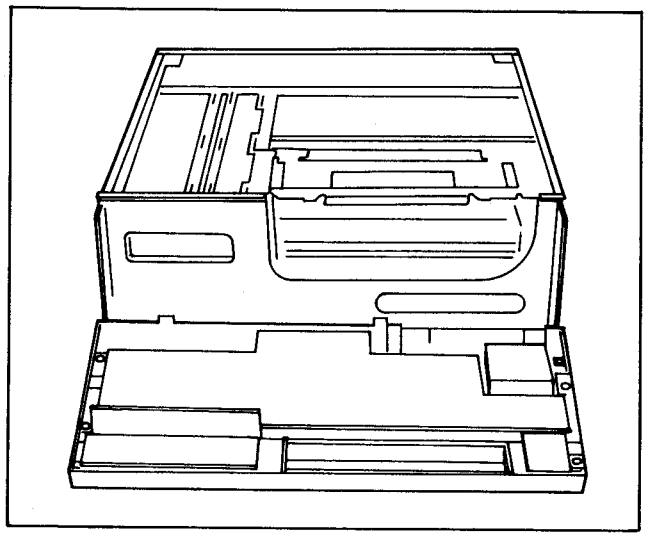

Figure D8

2–6. Removal of the Elevator Unit

1. Unscrew the 4 screws(G) on the Elevator Unit (Figure D9).
2. Carefully lift the Elevator Unit out.

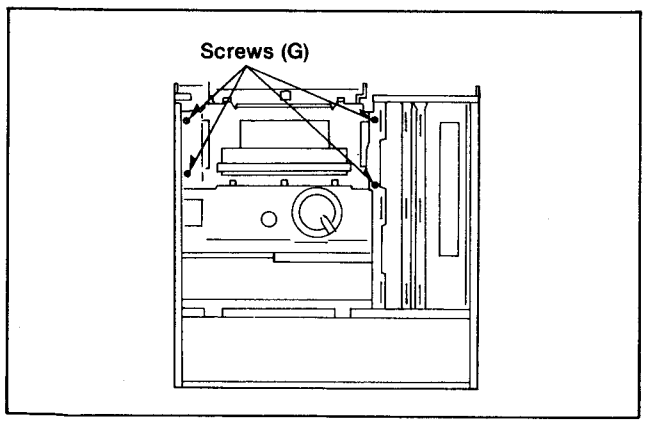

Figure D9

2–7. Opening of the Interface C.B.A.

1. Unlock the 2 lock pins (H) (Figure D10) and open up the Interface C.B.A. as shown in Figure D11.

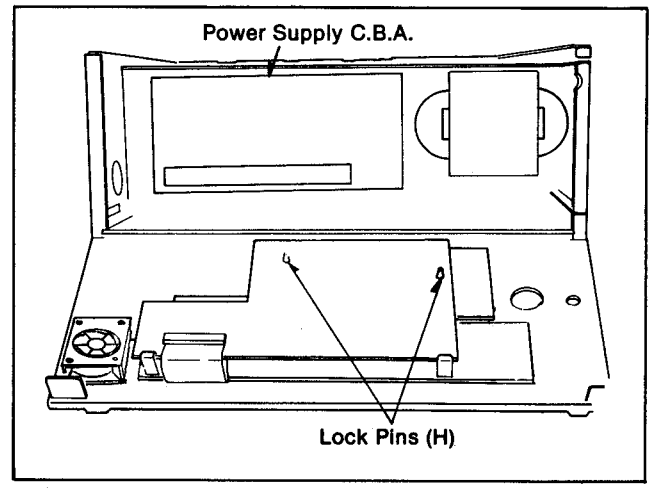

Figure D10

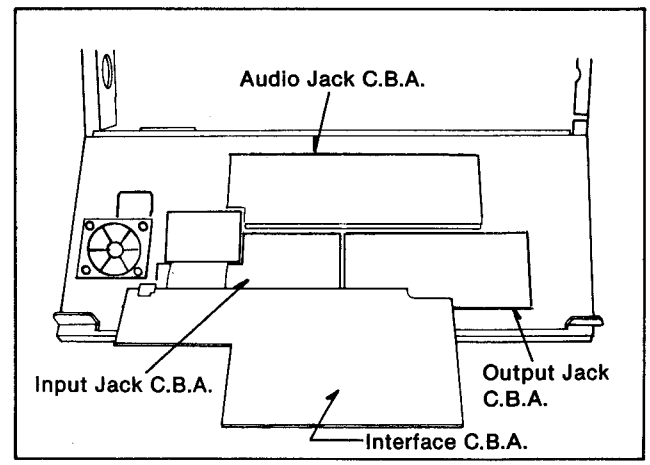

Figure D11

2–8. Opening of the Normal Audio C.B.A.

1. Unscrew the 3 screws(I) on the Normal Audio C.B.A. (Figure D12) and open up the Normal Audio C.B.A. as shown in Figure D13.

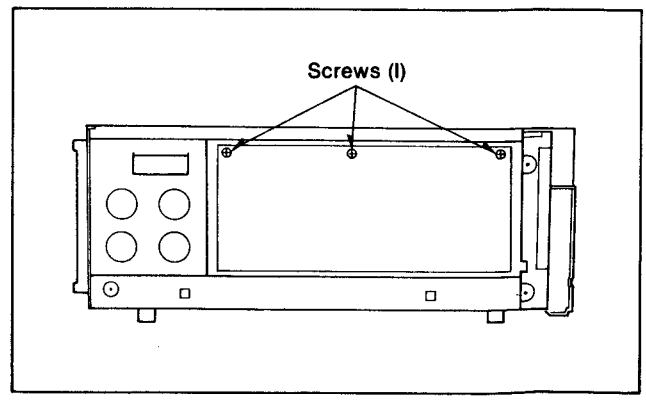

Figure D12

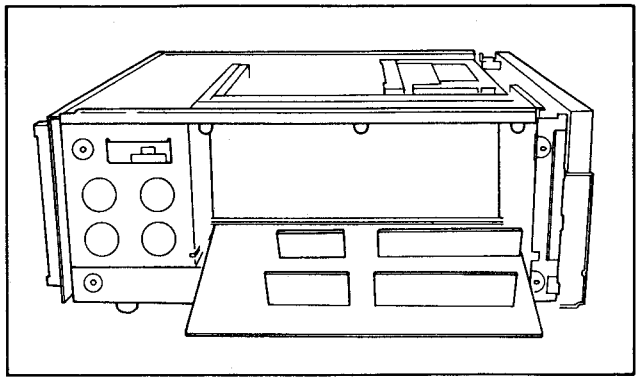

Figure D13

2–9. Removing of the Sub Video C.B.A.

1. Unscrew the 4 screws(J) on the Sub Video C.B.A. (Figure D14) and carefully pull out the Sub Video C.B.A. from the unit.

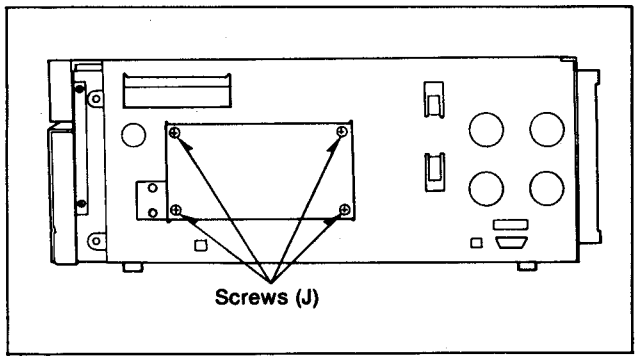

Figure D14

2–10. Opening of the Servo C.B.A., Video C.B.A. and Reel Servo C.B.A.

1. Unscrew the 5 screws(k) on the Servo & Video C.B.As. (Figure D15).
2. Open up the Servo & Video C.B.As. as shown in Figure D16.

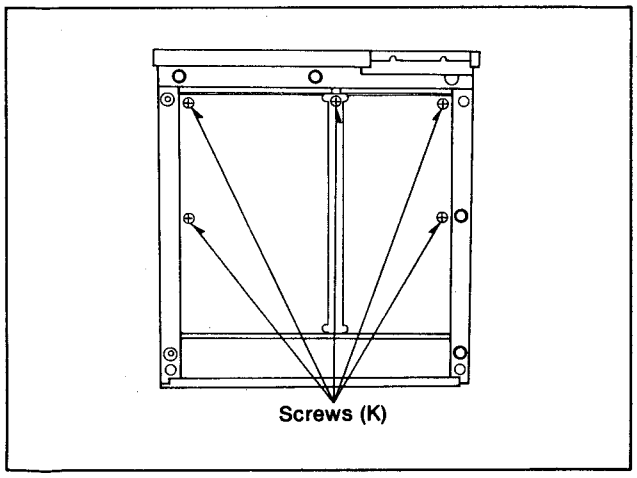

Figure D15

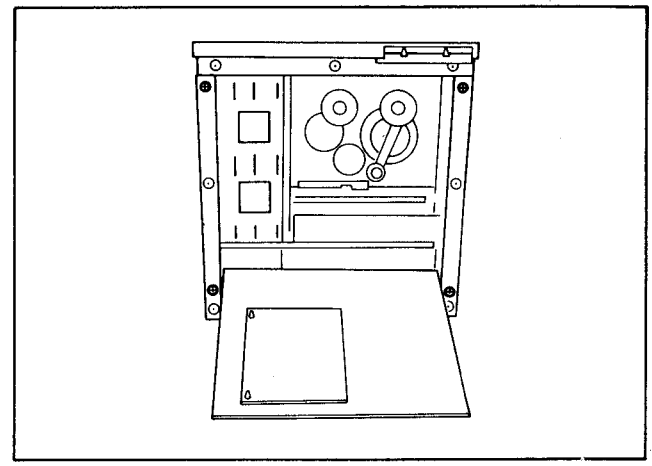

Figure D16

2–11. Opening of the Reel Servo C.B.A.

1. After opening of the Servo & Video C.B.As., unlock the 2 lock Pins (L) (Figure D17).
2. Open up the Reel Servo C.B.A. as shown in Figure D18.

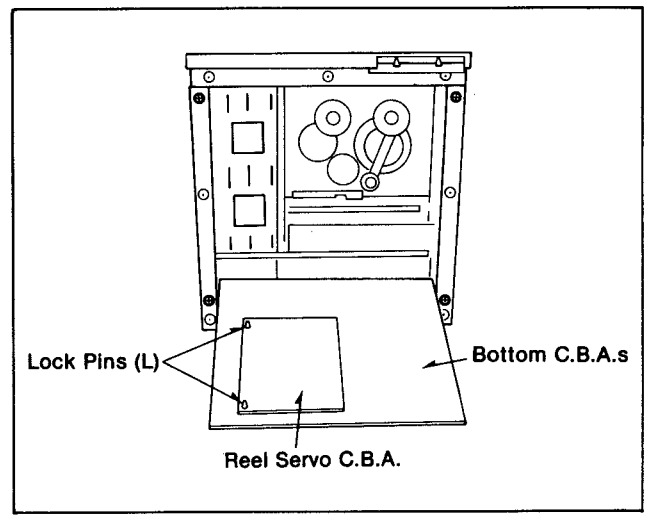

Figure D17

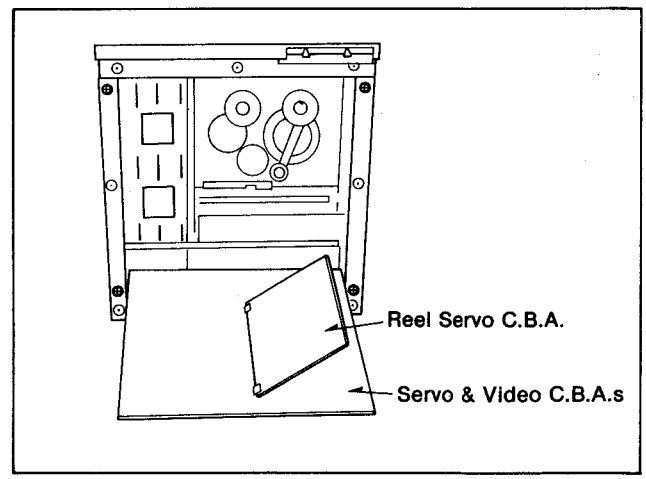

Figure D18

2–12. Removal of the Head Amp C.B.A.

1. Unscrew the 2 screws (M) (Figure D19).
2. Lift of Head Amp C.B.A. carefully.

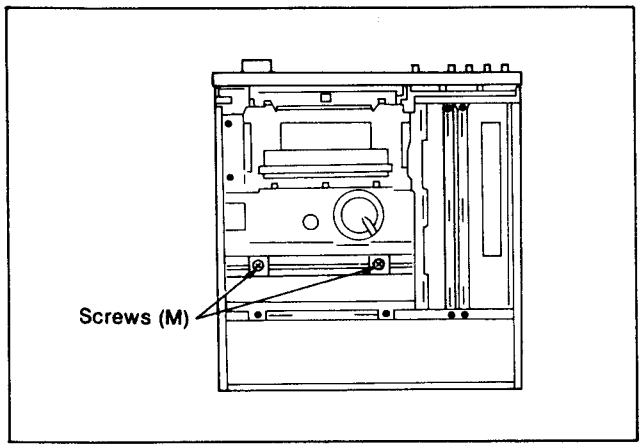

Figure D19

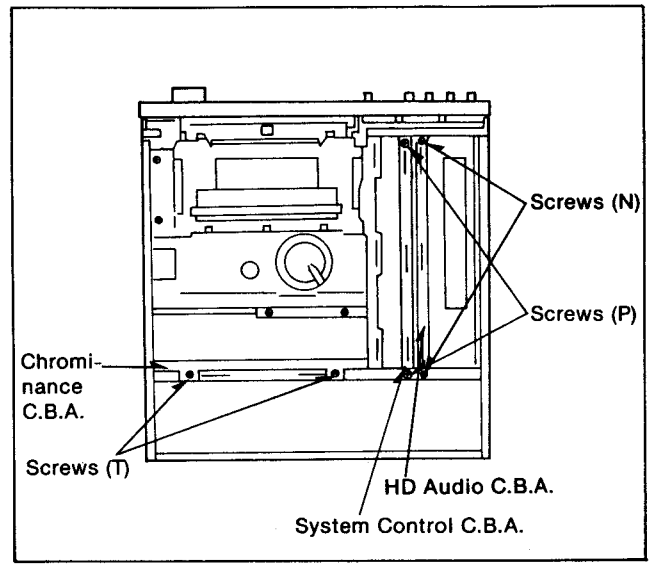

Figure D20

2–13. Removal of the HD Audio C.B.A., System Control C.B.A., and Chrominance C.B.A.

A. HD Audio C.B.A.

1. Unscrew the 2 screws(N)(Figure D20).
2. Lift the C.B.A. out from the unit.
3. Stand the C.B.A. using the C.B.A. standing holes (O) as shown in Figure D21 and Figure D22.

B. System Control C.B.A.

1. Unscrew the 2 screws (P) (Figure D20).
2. Lift the C.B.A. out from the unit.
3. Stand the C.B.A. using the C.B.A. standing holes (Q) as shown in Figure D21 and Figure D22.

C. Chrominance C.B.A.

1. Unscrew the 2 screws (T) (Figure D20).
2. Lift the C.B.A. out from the unit.
3. Stand the C.B.A. using the C.B.A. standing holes (U).

Note:
To prevent the C.B.A. damage or shock hazard, please pay attention when the C.B.A. in standed as shown in Figure D22.

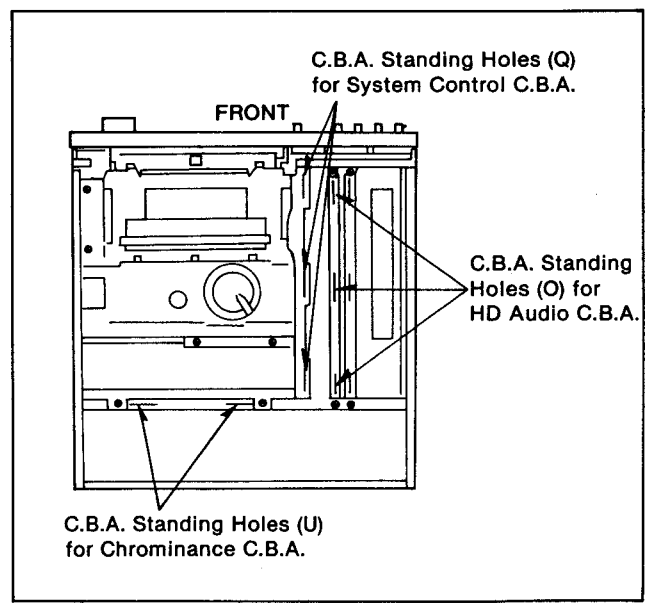

Figure D21

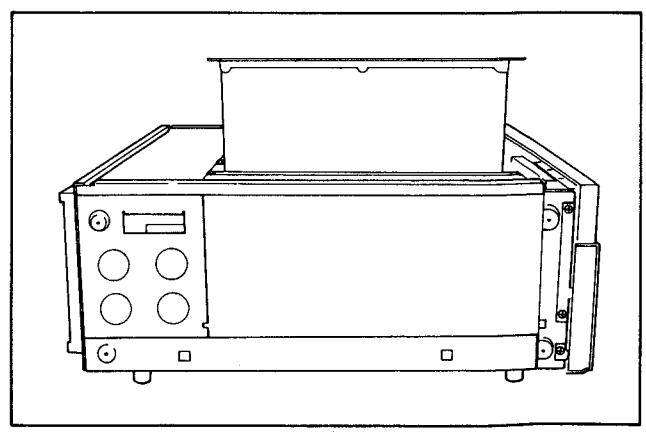

Figure D22

MECHANICAL ADJUSTMENT PROCEDURES

The regular maintenance is important to maintain the initial specification of the deck and to prevent tape damage.
The specified servicing fixture must be used to conduct adjustment.
The following fixtures,tools and measuring equipments are required to conduct complete Mechanical Adjustments.

CAUTION

When use the Tension Post Adj. Plate for TENSION POSTS POSITION ADJUSTMENT(4-2), pay attention to S-VHS detect switch on surface of mechanical chassis.

1. SERVICING FIXTURES & TOOLS

VFM8180HMDH VHS Alignment Tape 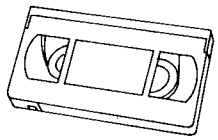 Refer to Technical Information order No. VRD-TS-409-1	VFK0343 Check Light 	VFK0344 Post Height Adjustment Fixture (P_1) VFK0345 Post Height Adjustment Fixture (P_4) 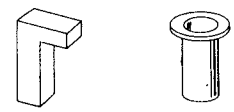 VFK0344 VFK0345
VFK0133 (Dial Torque Gauge) VFK0134 (Plastic Clamper Only) VFK0180 Adaptor for VFK0133 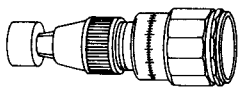	VFK0190 Reel Table Height Fixture 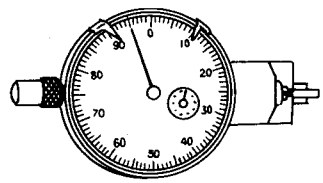	VFK0135 Eccentric Screwdriver
VFK0188 Cassette Holder Fixture 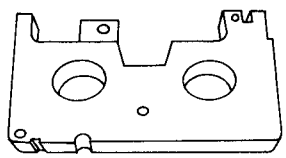	VFK0191 Post Adjustment Plate 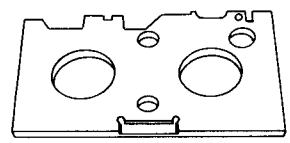	VFK0330 Fine Adjustment Screwdriver (3mmφ)
VFK0236 Tension Post Adj. Plate VFK0394 FWD Sensor Adj. Fixture VFK0393 REV Sensor Adj. Fixture 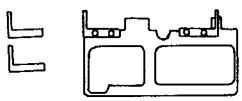	VFK0329 Post Adjustment Screwdriver 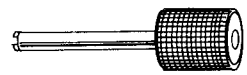	VFK0335 Retaining Ring Remover (3mm/4mm) 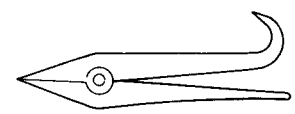
VFK0132 Back Tension Meter (Tentelometer, Made in U.S.A.) 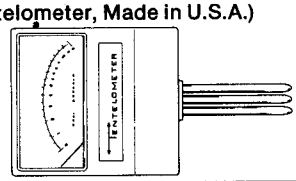	VFK27 Head Cleaning Stick MOR265 Morlytone Grease (Cam Gear, Slide Selection, Hyper Pressure Section etc.) 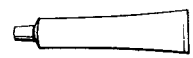	VFK0328 H-Position Adj. Fixture
VFK0326 Hex. Wrench (Set) (0.7, 0.9, 1.2, 1.5, 1.6, 2, 2.4, 3mm) 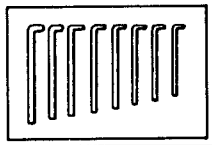	Cleaning Liquid (Freon TF., Alcohol) <Purchase Locally> (Tape Transport Rubber Parts etc.)	

2. CYLINDER MAINTENANCE PROCEDURES

2-1. PROCEDURES FOR CLEANING OF THE CYLINDER UNIT

1. Position the video head to permit access for cleaning and hold the upper cylinder to keep it from turning while cleaning.
2. Gently rub the video head in direction of tape travel with Head Cleaning Stick moistened with Freon TF.
3. Repeat for the other video heads. (Figure M1)

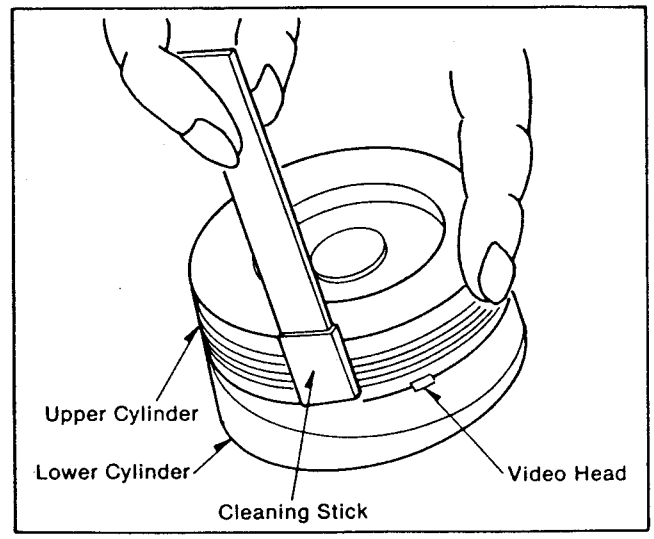

Figure M1

*Notes:
1. Do not rub vertically.
2. Do not apply any pressure to heads. If contraminant is not easily removed, continued gentle wiping will usually remove the substance.
3. Do not rotate the Upper Cylinder Unit clockwise when cleaning it.

3. TAPE INTERCHANGEABILITY ADJUSTMENT PROCEDURES

3-1. ADJUSTMENT FLOWCHART

This flow chart describes the order of steps for adjusting the tape guide posts and A/C head in order to gain access to the items needing servicing.

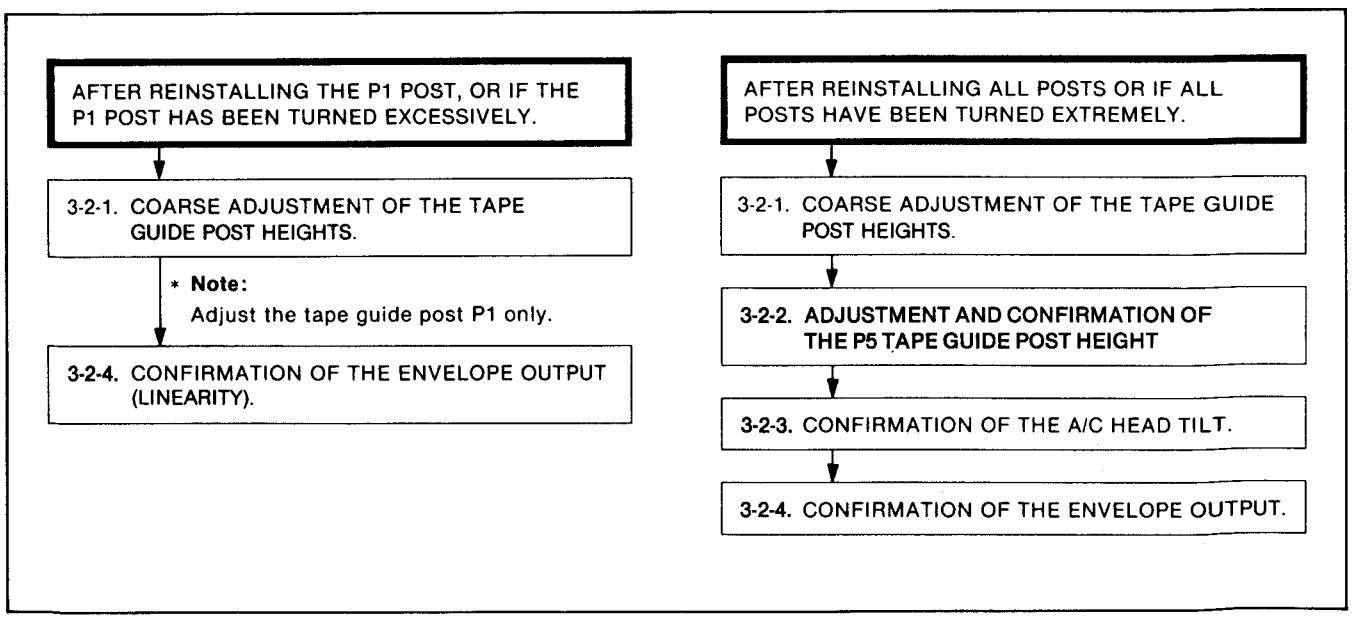

AFTER REINSTALLING THE A/C HEAD.

3-2-3. CONFIRMATION OF THE A/C HEAD TILT.

* **Note:**
Do not change the height of P4 post.

3-2-5. COARSE ADJUSTMENT OF THE A/C HEAD HEIGHT.

3-2-6. ADJUSTMENT OF THE A/C HEAD HEIGHT AND AZIMUTH.

3-2-7. COARSE ADJUSTMENT OF THE A/C HEAD HORIZONTAL POSITION (X-VALUE).

3-2-8. FINE ADJUSTMENT OF THE A/C HEAD HORIZONTAL POSITION (X-VALUE).

AFTER REINSTALLING THE P4 POST, OR IF THE P4 POST HAS BEEN TURNED EXCESSIVELY.

3-2-1. COARSE ADJUSTMENT OF THE TAPE GUIDE POST HEIGHTS.

* **Note:**
Adjust the P4 post only.

3-2-3. CONFIRMATION OF THE A/C HEAD TILT.

3-2-4. CONFIRMATION OF THE ENVELOPE OUTPUT (LINEARITY).

AFTER REINSTALLING THE PULL-OUT POST (P5 POST).

3-2-2. ADJUSTMENT AND CONFIRMATION OF THE P5 TAPE GUIDE POST HEIGHT

* **Note:**
Do not readjust any other post.

Figure M2 Tape Interchangeability Adjustment Flow Chart

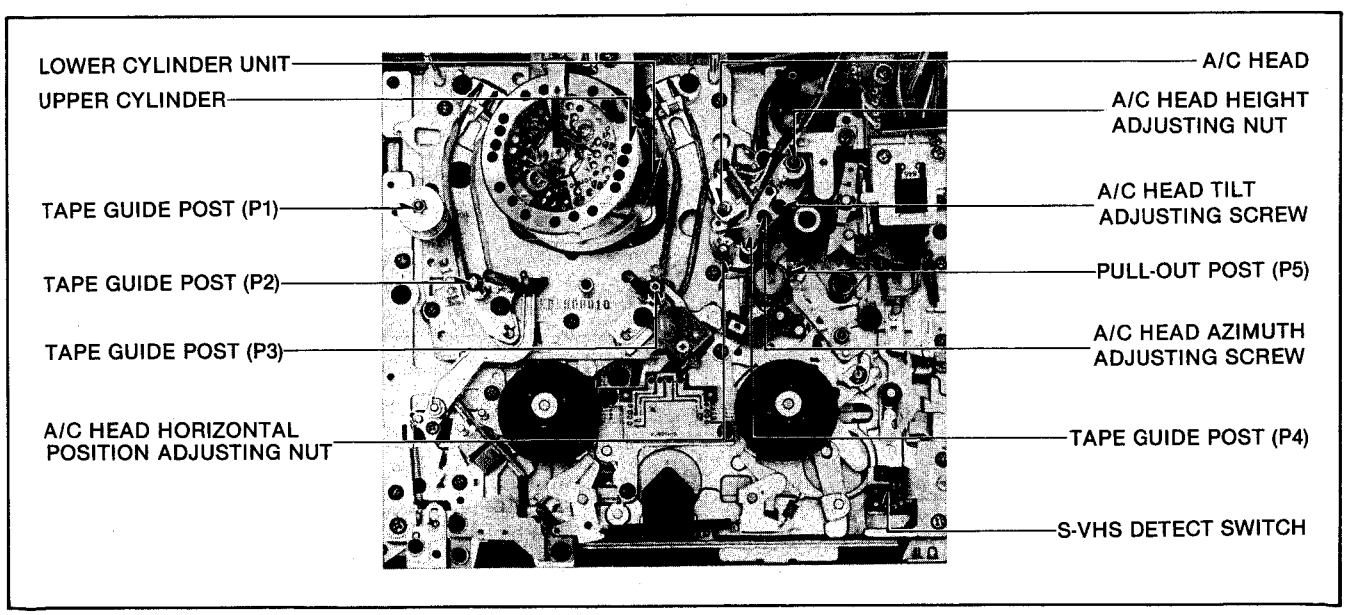

Figure M3

3-2. ADJUSTMENT PROCEDURES

3-2-1. COARSE ADJUSTMENT OF THE TAPE GUIDE POST HEIGHTS (P1, P2, P3 AND P4)

* Note:
  1. The Tape Guide Posts have been precisely adjusted at the factory.
     Therefore, normally do not change the height of the P1 and P4 Posts.
     The following adjustment is required only when replacing the posts.
  2. If the curling is apparent proceeded to the P4 Post, wipe dirt from the Pressure Roller and Capstan Shaft using a soft cloth impregnated with Freon TF or cleaning liquid.
  3. To prevent the alignment tape from being damaged, use a normal cassette tape for this procedure.

* Equipment Required:
  Post Height Adjustment Fixture (P1)
  .....VFK0344
  Post Height Adjustment Fixture (P4)
  .....VFK0345
  Nut Driver (Purchase Locally)
  Check Light.....VFK0343

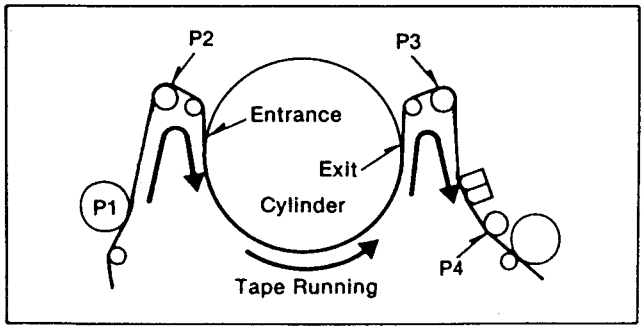

Figure M4 Tape Transport Posts

A. Adjustment and Confirmation of the P1 Post Height

1. Remove the Top Panel and the Front Loading Unit.
2. Set the P1 Post Height Adjustment Fixture as shown in Figure M5 and M6.

* Note:
  The P1 Post Height Adjustment Fixture must be set on the Polished Portion of Chassis near the P1 Post.

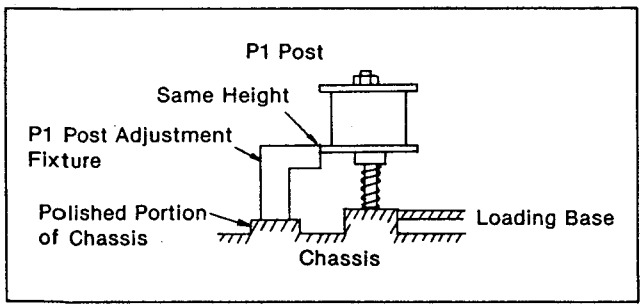

Figure M5

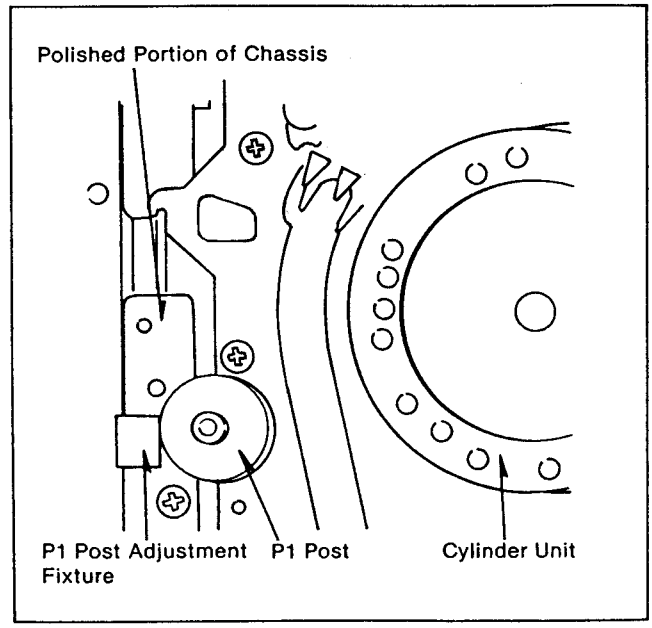

Figure M6

3. Confirm the lower flauge of the P1 Post is as same height as upper edge of the P1 Post Height Adjustment Fixture. (Figure M5 and M6)
4. If the height is not same, adjust the P1 Post Height by the Nut Driver.
5. Finally, play back the ending portion of NV-E180 cassette, and confirm that the lower flange of the P1 post just touches the bottom edge of the tape by using the Check Light. If there is waving or frilling at the lower or upper edge of P1 Post, readjust the Height of P1 Post correctly. (Figure M7)

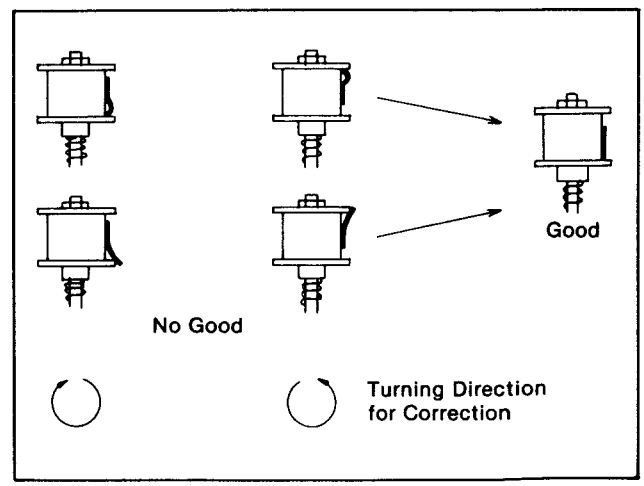

Figure M7

B. Adjustment and Confirm of the P4 Post Height

* Note:
  1. Prevent any damage for the P4 Post, so set or remove the P4 Post Height Adjustment Fixture carefully.
  2. Confirm that the P4 Post Height Adjustment Fixture is SET on the Chasses perfectly, when adjusting P4 Post Height. Do not put the wire of connector P6705 near the P4 Post between the P4 Post Height Adjustment Fixture and Chassis.

1. Set the P4 Post Height Adjustment Fixture as shown in Figure M8.

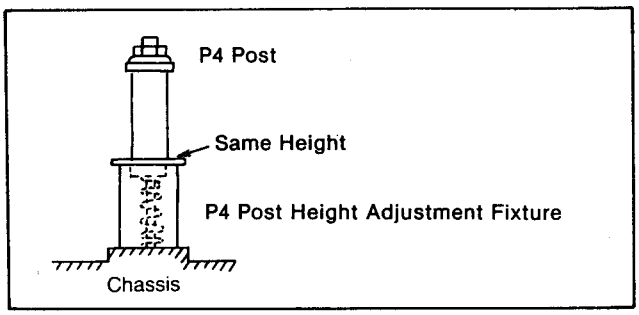

Figure M8

2. Confirm the lower edge of the P4 Post as same height as upper edge of the P4 Post Adjustment Fixture. (Figure M8)
3. If the height is not same, adjust the P4 Post height by the Nut Driver.
4. Play back the beginning portion of NV-E180 cassette, and confirm that the lower flange of the P4 post just touches the bottom edge of the tape by using the Check Light.
   If there is waving or frilling at the lower or upper edge of the tape, correct the tilt of A/C Head. After adjusting tilt of the A/C Head, the A/C Head Height Adjustment may be needed. (Figure M8)

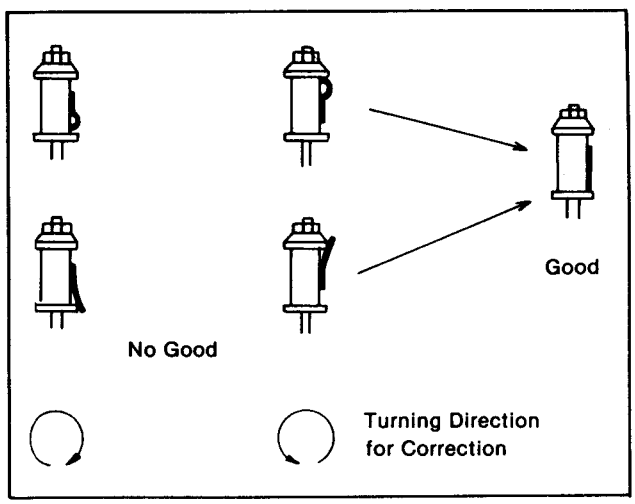

Figure M9

C. Adjustment and Confirmation of the Tape Guide Post Heights (P2, P3)

* Note:
  This adjustment and confirmation should be performed after adjustment of the P1 and P4 Tape Guide Post Heights.

* Equipment Required:
  Post Adjustment Screwdriver.....VFK0329
  Check Light.....VFK0343

1. Remove the Top Case.
2. When repeating the Loading and Unloading, confirm tape travel by using the Check Light. If there are waving or frilling at the lower or upper edge of the P2 and P3 Posts,readjust the heights of P2 and P3 Posts correctly so that the upper flanges of P2 and P3 posts just touch the upper edge of the tape. (Figure M10)

* Note:
  Use the beginning and end portions of the NV-E180 cassette.

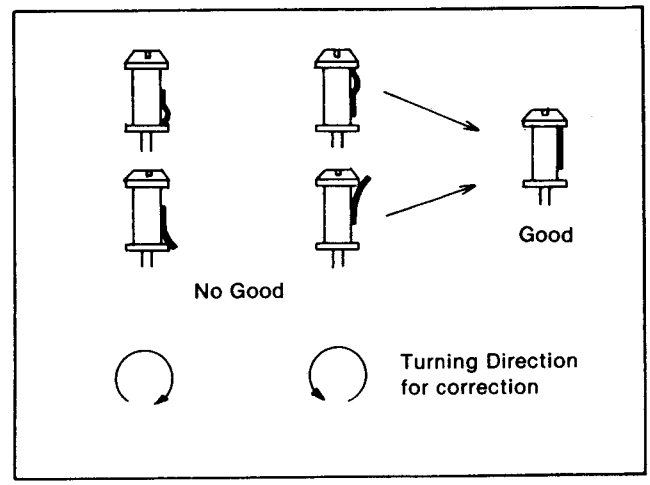

Figure M10

3. Confirm that the tape runs along the Cylinder Lead Correctly.
4. After adjusting the Tape Guide post Hights (P1, P2, P3, P4) adjustment of the Final Tape Interchangeability is required.
   (Refer to the items 3-2-3, 3-2-4, 3-2-5, 3-2-6, 3-2-7 and 3-2-8)

3-2-2. ADJUSTMENT AND CONFIRMATION OF THE P5 TAPE GUIDE POST HEIGHT

* Note:
  This procedure is the last item of the Tape Interchangeability so it should be performed after adjusting other Tape Interchangeability items.

* Equipment Required:
  Nut Driver (Purchase Locally)
  Check Light.....VFK0343

1. Remove the Top Panel and turn the power switch on. Insert the NV-E180 cassette.
2. Play back the beginning and end portions of the cassette by REV mode.
3. Confirm that the tape runs between lower and upper edges of the P5 Post by using the Check Light. If there is waving or frilling at the lower or upper edge of the P5 Post, correct the P5 Post Height.

3-2-3. CONFIRMATION OF THE A/C HEAD TILT

* Note:
  This procedure should be performed after replacing the A/C head and pressure roller, and adjusting the height of the tape guide post (P4).
  (Refer to "COARSE ADJUSTMENT OF THE TAPE GUIDEPOST HEIGHTS".)

* Tools and Equipment Required:
  Hex Wrench Set (0.9mm).....VFK0326
  Nut Driver (purchase locally)

1. Play back the beginning portion of NV-E180 blank cassette tape and confirm that the tape runs between lower and upper limiters of the P4 post. If there is waving or frilling in the lower edge or top edge of the tape, correct the tilt of the A/C head by turning the Hex screw located behind the A/C head. (Figure M11)

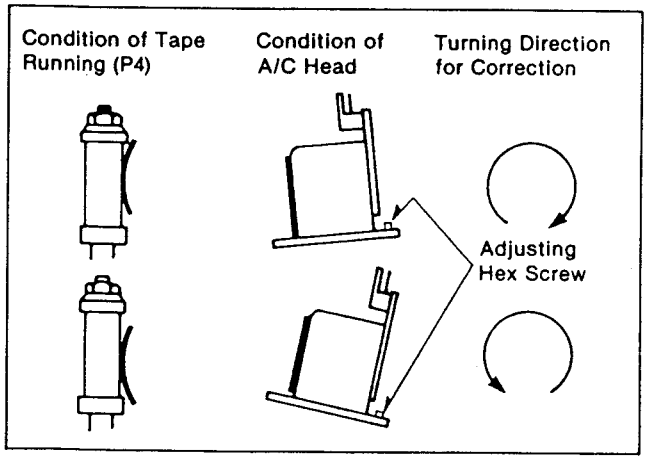

Figure M11

2. If the tape curling cannot be acomplished by adjusting the A/C head tilt, then readjustment of the height of the tape guide post (P4) may be needed.

* No tes:
  1. The tape guide post (P4) has been precisely adjusted at the factory. Therefore, normally the tape guide post (P4) readjustment is not required to eliminate the tape curling.
  2. After adjusting the A/C head tilt, the A/C head height adjustment is required.

3-2-4. CONFIRMATION OF THE ENVELOPE OUTPUT (LINEARITY)

* Note:
  Before playing back the alignment tape, play back a normal cassette tape and confirm correct transport.
  (Refer to "CONFIRMATION OF THE TAPE TRANSPORT".)

* Tools and Equipment Required:
  Post Adjustment Screwdriver.....VKF0329
  Alignment Tape.....VFM8180HMDH

1. Connect the scope to TP5006 on the Video Head AMP. C.B.A. and TP5005 on the same C.B.A. to Ext-Trigger the scope.
2. Play back the 2nd portion (Monoscope) of the alignment tape VFM8180HMDH.
3. Turn the Tracking Control VR and adjust for maximum RF envelope.
4. If the RF envelope appears like example "A" or "B" in Figure M12, then adjustment of the tape guide post (P2: Entrance) is necessary.
5. Adjust the tape guide post (P2) with the post adjustment screwdriver so that the Video RF envelope waveform at the entrance portion becomes flat as shown "C" in Figure M12. (See Figure M15,too).

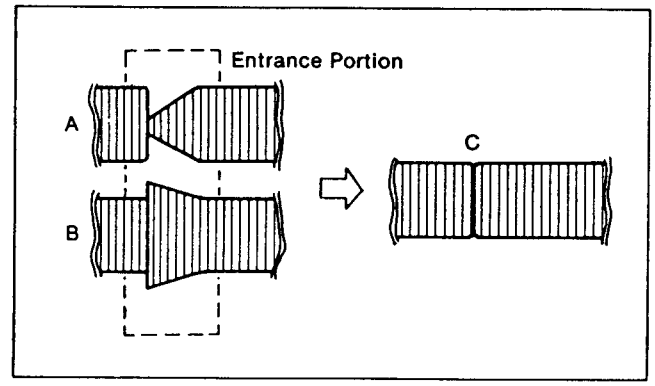

Figure M12

6. If the RF envelope appears like example "D" or "E" in Figure M10, then adjustment of the tape guide post (P3: Exit) is necessary.
7. Adjust the tape guide post (P3) in the same manner as the P2 post so that the exit portion becomes flat as shown in "F" in Figure M13.

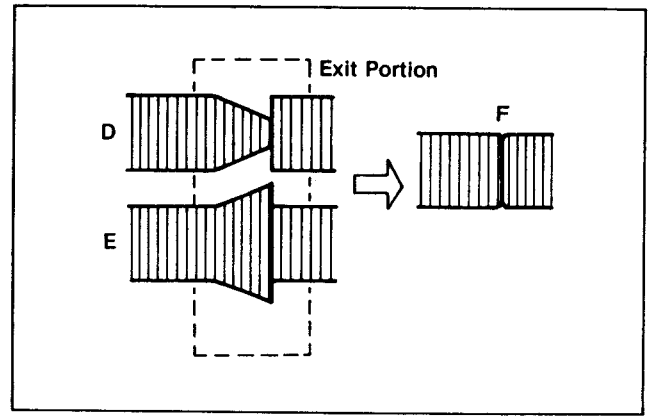

Figure M13

8. Turn the Tracking VR from end to end.
   The variation of RF envelope should be nearly parallel as shown in Figure M14.
9. Turn the Tracking VR and adjust for maximum RF envelope.
   If the RF envelope does not meet these specs,
   V1/V>0.7, V2/V>0.8,
   then repeat steps 1-9 again. (Figure M16)

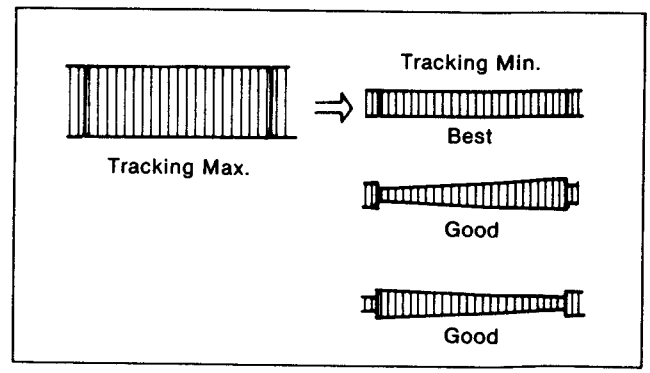

Figure M14

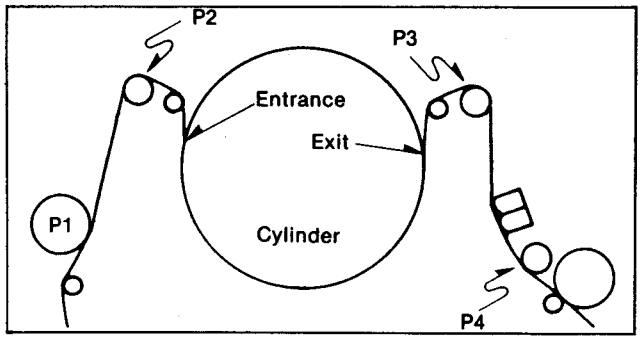

Figure M15 Loading of Posts

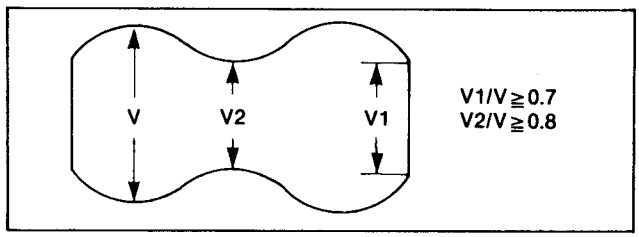

Figure M16 Spec. of Envelope Figure

10. Turn the Tracking VR from end to end again and then back to the detent (Fix) position.
    At the detent position, the RF envelope waveform should be at maximum. If it is not at maximum then "ADJUSTMENT OF THE A/C HEAD HORIZONTAL POSITION". is necessary.

(Refer to "FINE ADJUSTMENT OF THE A/C HEAD HORIZONTAL POSITION".)

3-2-5. COARSE ADJUSTMENT OF THE A/C HEAD HEIGHT

* Note:
  This procedure should be performed only when the A/C Head is replaced.

* Tools and Equipment Required:
  Check Light.....VFK0343
  Nut Driver (Purchase locally)

With the tape running, look at the lower edge of the control head by using the check light and check if the lower edge of tape runs along the lower edge of the control head.
If it doesn't slightly turn the nut (A) behind the A/C Head (Figure M17) to either lower or raise the A/C head so that the tape runs along the lower edge of the control head.
Turn the nut (A) clockwise to lower the head, and counterclockwise to raise it. (Figure M17)

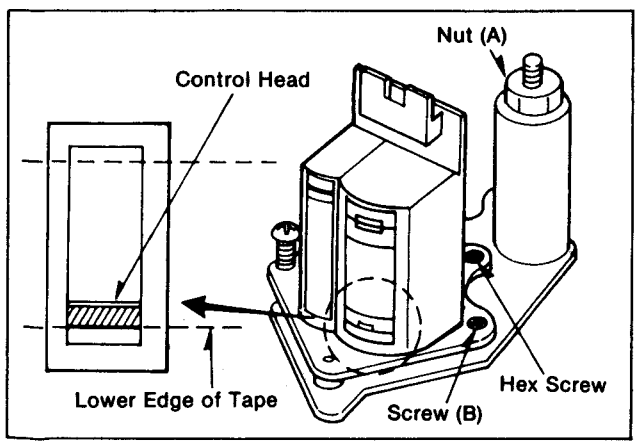

Figure M17

3-2-6. ADJUSTMENT OF THE A/C HEAD HEIGHT AND AZIMUTH

* Note:
  This procedure should be performed only when the A/C Head is replaced and posts hight are readjusted.

* Tools and Equipment Required:
  Nut Driver (Purchase locally)
  Alignment Tape.....VFM8180HMDH

1. Connect the scope CH1 to the HD/NOR Audio Output CH1 and the scope CH2 to the HD/NOR Audio Output CH2 on the rear panel.
2. Play back the 2nd portion (Normal Audio 6kHz) of the alignment tape, VFM8180HMDH.
3. Adjust the screw (B) so that the CH2 output level becomes maximum. (Figure M18)

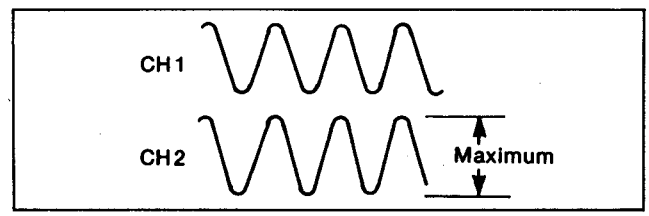

Figure M18

4. Then adjsut the nut (A) so that the CH2 envelope becomes maximum.
5. Readjust the screw (B) so that the phases of the both channel are matched as shown below. (Figure M19)

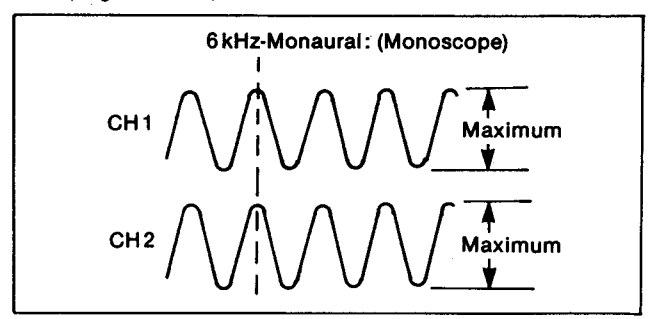

Figure M19 Adjustment of A/C Head Height and Azimuth-(3)

3-2-7. COARSE ADJUSTMENT OF THE A/C HEAD HORIZONTAL POSITION

* Note:
  This procedure should be performed only when the A/C head is replaced, and after performing the tape interchangeability adjustment.

* Tools and Equipment Required:
  H.Position Adj. Fixture.....VFK0328
  Alignment Tape.....VFM8180HMDH

1. Set the tracking Control VR to the center detent (fixed) position.
2. Connect the scope CH1 to TP5006 on the Video Head Amp. C.B.A., and CH2 to TP4001 on the NORMAL AUDIO C.B.A.
3. Play back 1st position (Monoscope and Normal Audio 3kHz) of the Alignment tape VFM8180HMDH.
4. Adjust A/C head horizontal position screw so that the phase of Audio drop out and RF envelope drop out becomes almost the same. (Figures M20 and M21)

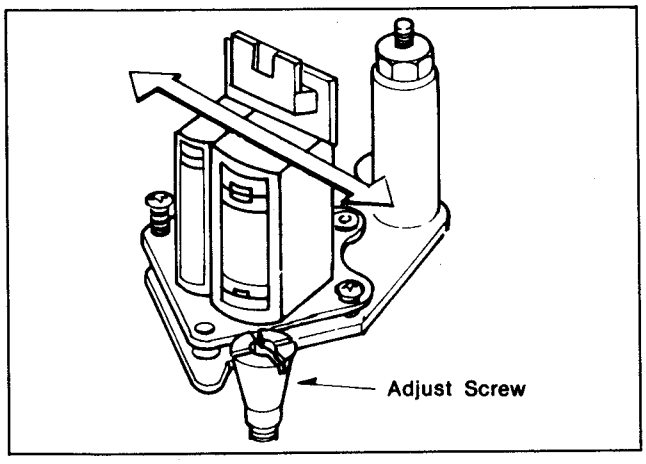

Figure M20

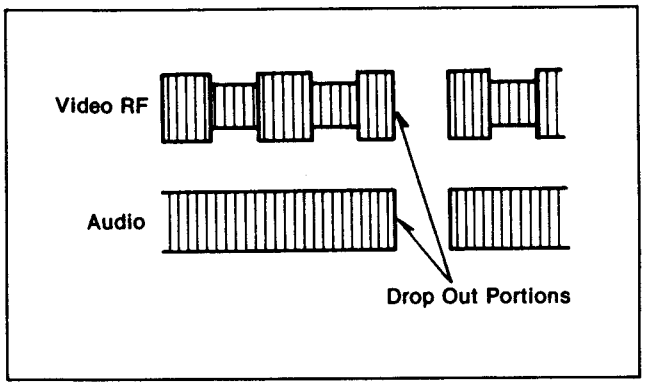

Figure M21

3-2-8. FINE ADJUSTMENT OF THE A/C HEAD HORIZONTAL POSITION (X-VALUE)

* Note:
  When the A/C head is replaced, the coarse adjustment of the A/C head horizontal position is required before performing this fine adjustment.

* Tools and Equipment Required:
  H.Position Adj. Driver.....VFK0328
  Alignment Tape.....VFM8180HMDH

1. Set the Tracking Control VR to the center detent (fixed) position.
2. Connect the scope CH1 to TP5006 on the Video Head Amp C.B.A., and TP5005 on the same C.B.A. to Ext-trigger the scope.
3. Play back 2nd position (Monoscope) of the Alignment tape, VFM8180HMDH.
4. Adjust the adjust screw so that the RF envelope output level becomes maximum at the detent position. (Figure M20)
5. Turn the Tracking VR from end to end and then back to the detent position.
   Confirm that the FM envelope output level is maximized at the detent position. (Figure M14)

4. OTHER ADJUSTMENT PROCEDURES

4-1. ADJUSTMENT OF THE SUB-LOADING ARM UNIT

* Equipment Required:
  Eccentric Screwdriver.....VFK0135
  Philips Screwdriver (purchase locally)

* Specification:
  t=0.5+-0.2mm

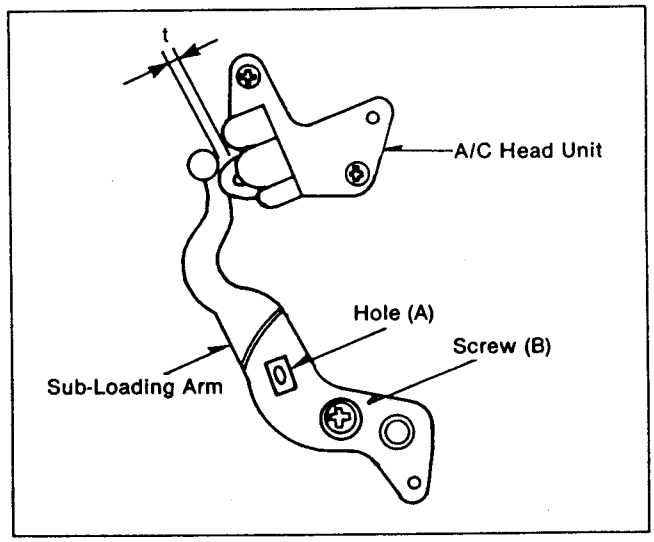

Figure M22

1. Remove the Top Cover and Cassette Compartment.
2. Insert a cassette to the removed cassette compartment. This simulates the sub-loading completion mode.
3. Turn the power switch off.
4. Loosen the screw (B), and insert the eccentric screwdriver into the adjustment hole (A). (Figure M22)
5. Adjust the position of the sub-loading threading arm unit so that the gap "t" between the Sub-Loading arm and the AE head is 0.5mm +-0.2mm. (Figure M22)

4-2. TENSION POSTS POSITION ADJUSTMENT

* Equipment Required:
  Tension Post Adjustment Plate.....VFK0236
  FWD Sensor Adj. Fixture.....VFK0394
  REV Sensor Adj. Fixture.....VFK0393
  Fine Adj. Screwdriver.....VFK0330
  Vacuum Tube Volt Meter (VTVM) or Digital Volt Meter

1. Remove the Top cover and the Cassette Compartment.
2. Insert a cassette to the removed cassette compartment.
3. Install the Tension Post Adjustment Plate after the sub-loading complete. Then, push the play button.

Note:

1. Fix the FWD sensor adjustment fixture (VFK0394) on the tension post adjustment plate (VFK0236) when measuring the supply forward tension. Use the REV sensor adjustment fixture (VFK0393) when measuring the supply reverse tension.
2. When adjust the Tension Post, ensure setting of the Tension Post Adj. Plate.

Change this part.
Supply Forward: VFK0394
Supply Reverse: VFK0393

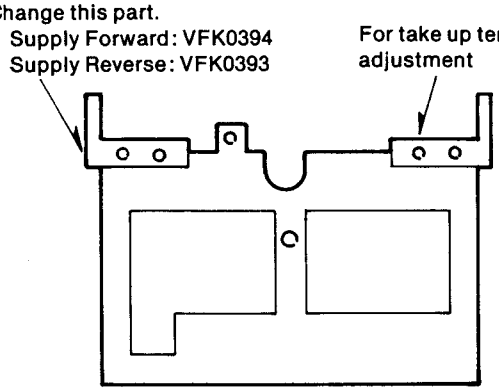

This fixture Tension Post Adj. Plate (VFK0236).

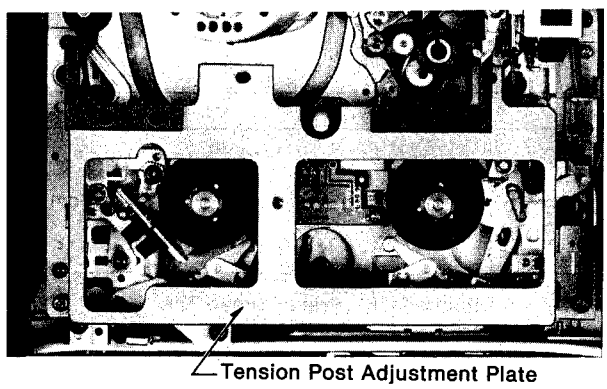

Figure M23

4–2–1. FWD TENSION POST POSITION ADJUSTMENT

1. Place the Tension Post Position Adjustment plate (VFK0236) with Forward Tension Jig (VFK0394) over the reel tables. (Figure M23) Then, push the play button. (Figure M23)
2. Connect the DVM to TP6001 on the SYSTEM CONTROL C.B.A.
3. Loosen the screw (A).
4. Insert the fine adjustment screwdriver into the adjustment hole (B) next to the screw (A) and adjust the Tension Arm Unit to 2.0V~2.5V. (Figure M24)
5. Tighten the screw (A). (Figure M24)

4–2–2. REV TENSION POST POSITION CONFIRMATION AND ADJUSTMENT

1. Place the Tension Post Position Adjustment plate (VFK0236) with the Reverse Tension Jig (VFK0393) over the reel tables. Then, push the play button.
2. Connect the DVM to TP6002 on the SYSTEM CONTROL C.B.A.
3. Loosen the screw (C). (Figure M24)

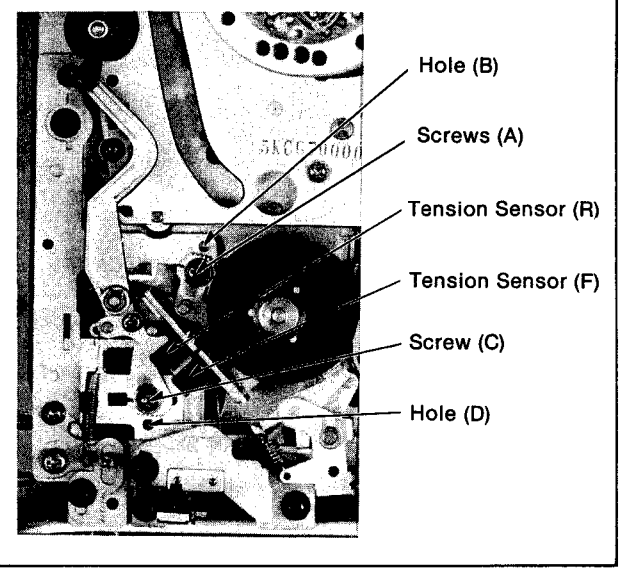

Figure M24

4. Insert the fine adjustment screwdriver into the adjustment hole (D) next to the screw (C) and adjust the Tension Arm Unit to 2.0~2.5V. (Figure M24)
5. Tighten the screw (C). (Figure M24)

4–2–3. TAKE–UP TENSION POST POSITION CONFIRMATION AND ADJUSTMENT

1. Place the tension post adjustment plate (VFK0236) over the reel tables. (Figure M23) Then, push the play button.
2. Connect the DVM to TP6003 on the SYSTEM CONTROL C.B.A.
3. Loosen the screw (A). (Fifure M25)
4. Insert the fine adjustment scrwedriver into the adjustment hold (B) next to the screw and adjust it so that the voltmeter indicates 2~2.5V. (Figure M25)

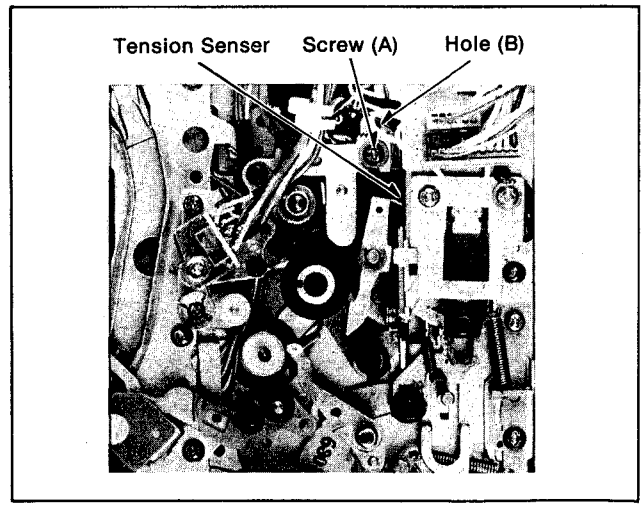

Figure M25

5. Rotate the Tension Arm counterclockwise by hand.
   The DVM should indicate 0~0.5V.
   Next, rotate the Tension Arm clockwise. The DVM should now indicate 4.5V+−0.5V.
6. Rotate the tension arm clockwise by hand. The DVM should indicate 0~0.5V.
   Next, rotate the Tension Arm counter−clockwise. The DVM should now indicate 4.5V +−0.5V.

4-3. SUPPLY & TAKE-UP BRAKE SOLENOID ADJUSTMENT

* Equipment Required:
  Eccentric Screwdriver.....VFK0135

1. Remove the Top Case, Cassette Compartment and Front panel.
2. Loosen the 4 screws (B) and insert the eccentric screwdriver into the hole (C). (Figure M26)

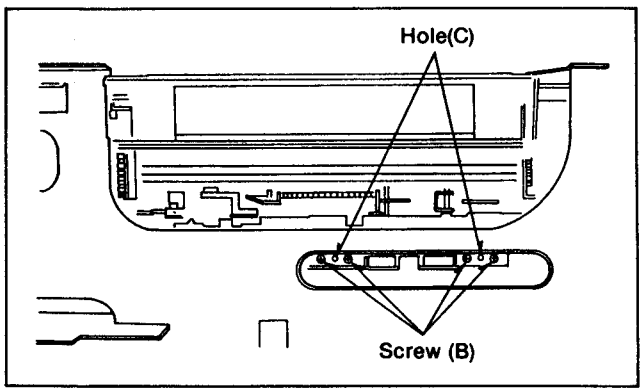

Figure M26

3. Adjust the position of the Brake Solenoid so that the gap "t1" and "t2" between Supply & Take−up Table and Supply & Take−up brake is 0.5mm+−0.2mm. (Figure M27)

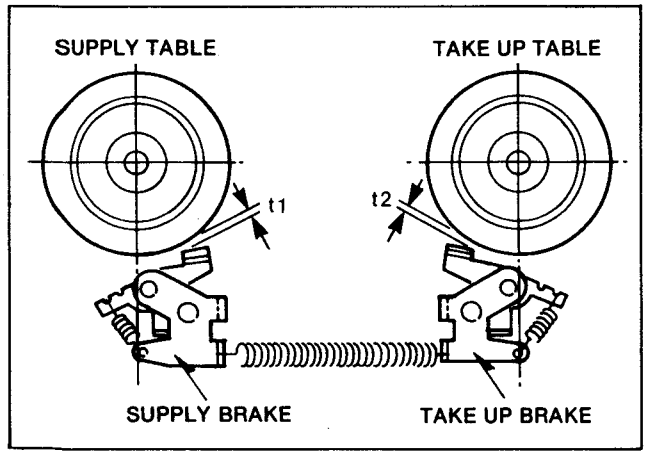

Figure M27

4-4. CONFIRMATION/ADJUSTMENT OF THE BRAKE TORQUE

Confirmation Procedure

* Equipment Required:
  Torque Gauge.....VFK0133
  Adaptor for Gauge.....VFK0134

1. Remove the top cover and the cassette compartment.
2. Attach the adaptor to the torque gauge and place the deck in STOP mode.(Figure M29)
3. Place the torque gauge on the reel table.
   The weight of the gauge should not rest on the reel table.
4. Turn the torque gauge in the direction indicated in Figure M28 until the brake begins slipping and read the gauge.

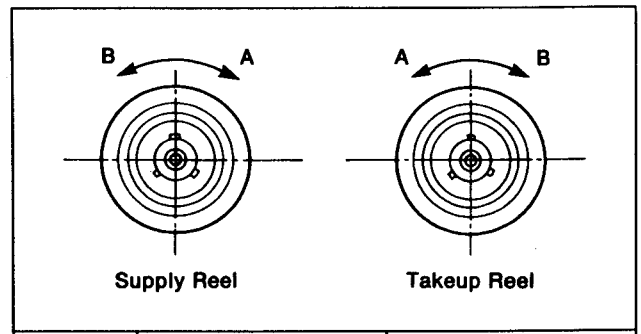

	A	B
Takeup	450~800g~cm	250~500g-cm
Supply		

Figure M28 Brake Torque Spec.

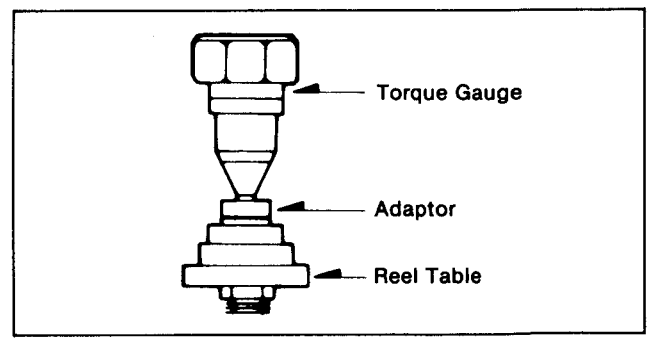

Figure M29 Measuring Method

Adjustment Procedure

To adjust the brake torque, move the spring to a different notch on the brake arm. Increase the brake torque by moving the spring to an outer notch and decrease the brake torque by moving the spring to an inner notch. (Figure M30)

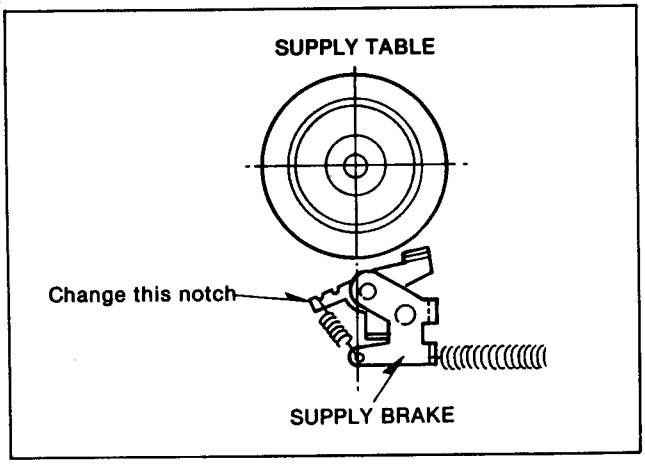

Figure M30 Adj.of Brake Torque

* Note:
If the proper brake torque cannot be obtained by changing the position of the spring, clean the braking surface of the reel table with a soft cloth and remeasure the brake torque. If it is still out of specification, replace the Brake Arm Unit.

4-5. CONFIRMATION OF THE FF TORQUE

* Equipment Required:
Dial Torque Gauge.....VFK0133
Adaptor for Gauge.....VFK0134

* Specifications:
Back Tension Torque.....3~15g-cm
Take-up Torque.....more than 350g-cm

1. Remove the top cover and the cassette compartment.
2. Attach the adaptor to the torque gauge, and blind the take-up and supply photo transistors with pieces of black tape. Lower the cassette compartment and turn the power switch on.
3. Set the torque gauge on the supply reel table. Push the F.F. button and measure the back tension torque.

* Note:
While measuring, the weight of the gauge should not rest on the reel table.

4. Set the torque gauge on the take-up reel table. Push the FF button then use your hand to stop the supply reel table from rotating. Measure the take-up torque.

* Note:
There are no adjustments in this procedure. If the torque readings are off considerably, the rollers, idlers or reel tables may need replacement.

4-6. CONFIRMATION OF THE REW TORQUE

* Equipment Required:
Diakl Torque Gauge.....VFK0133
Adaptor for Gauge.....VFK0134

* Specifications:
Back Tension Torque.....5~15g-cm
Take-up Torque.....more than 350g-cm

1. Remove the top panel and the cassette compartment.
2. Attach the adaptor to the Dial Torque Gauge and blind the take-up and supply photo transistors with pieces of black tape. Lower the cassette compartment and turn the power switch on.
3. Set the gauge on the take-up reel table. Push the REW button and measure the back tension torque.

* Note:
While measuring the weight of the gauge should not rest on the reel table.

4. Set the gauge on the supply reel table. Push the REW button, then use your hand to STOP the take-up reel table from rotating. Measure the take-up torque of the supply reel table.

4-7. MEASUREMENT AND ADJUSTMENT OF THE BACK TENSION

A. Measurement Procedure

* Equipment required:
Back Tension Meter (Tentelometer).....VFK0132
VHS Cassette Tape (240-minute tape)

* Specifications.....25+-2g

1. Remove the top cover and the cassette compartment.
2. Play back the cassette tape from the beginning and wait until the tape movement has stabilized. (for approx. 10 to 20 seconds)
3. Insert tension meter over the tape and take a reading. (Figure M31)

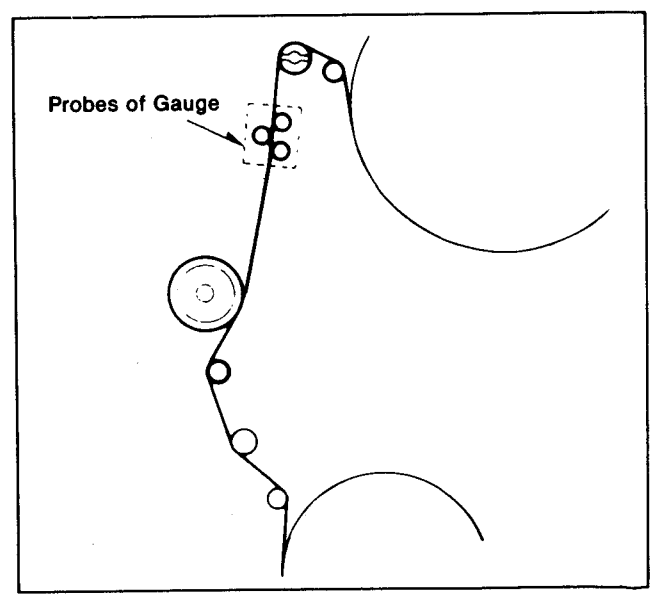

Figure M31 Measurement of Back Tension

* Note:
  1. While measuring, make sure that the three probes of the meter are all in good contact with the tape, but out of contact with the supply inertia roller.
  2. As the tension meter is very sensitive, we recommended taking 3 separate readings.

B. Adjustment Procedure

* Equipment Required:
  Fine Adjustment Screwdriver.....(VFK0330)

1. Remove the top cover and the cassette compartment.
2. Loosen the screw (A) and insert the fine adjustment screwdriver into the hole (B). (Figure M32)
3. Move the adjustment screwdriver in either of the directions indicated by the arrow in Figure M32 to obtain the specified tension. Turn the driver clockwise to decrease the tension, counter-clockwise to increase it.
4. Tighten the screw (A) and remeasure the tension with the meter to confirm it.

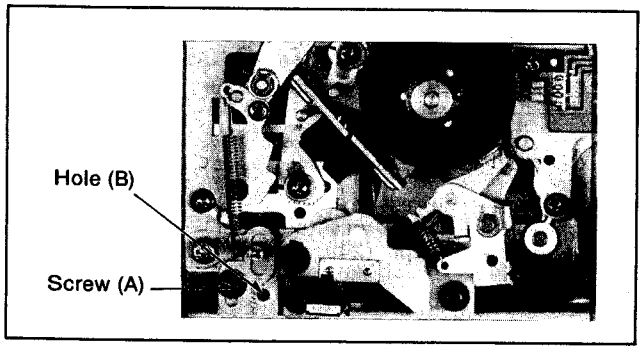

Figure M32

4-8. ADJUSTMENT OF THE REEL TABLE HEIGHTS

* Equipment required:
  Post Adjustment Plate.....VFK0191
  Reel Table Height Fixture.....VFK0190

* Specification:
  0mm+-0.1mm

1. Remove the Cassette Compartment.
2. Place the Post Adjustment Plate over the reel tables.
3. Place the Reel Table Height Gauge on the plate so that the scraper on the gauge touches the cut-out portion of the plate, then set the gauge to zero ("0"). (Figure M33)

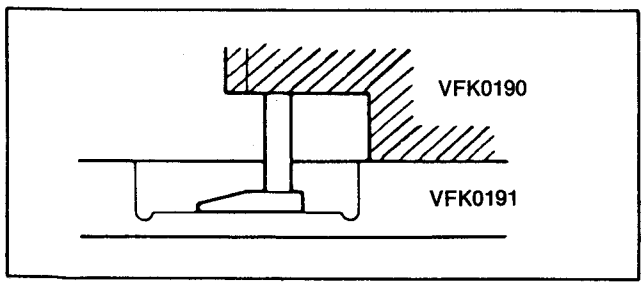

Figure M33

4. Measure the height of the top surface of either reel table and note the difference in height from the plate cut-out. (Figure M33 and M34)
   Repeat this procedures for the other reel table.

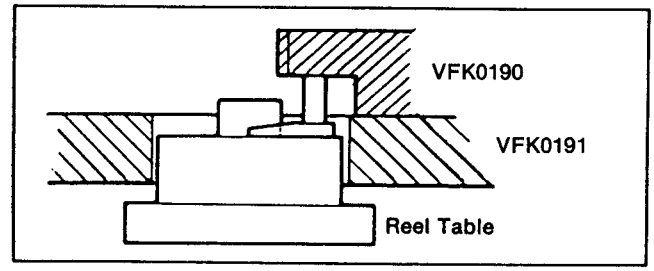

Figure M34

5. If the difference is more than 0.1mm higher or lower, replace the poly slider washer located under the reel table with one of the appropriate thickness. Poly slider washers are avilable in thickness of 0.13mm, 0.25mm and 0.5mm.

4-9. ADJUSTMENT OF CAM GEAR

General Description:
The mechanism of this model is primarly engaged to the electrical System Control Circuit through the mode select switch. Therefore, the relation of the mode switch and the cam gear decides all further mechanical movement of the mechanical parts such as levers, gears, rollers and so on.
If the cam gear and the mode select switch are improperly adjusted, the deck will either unload the tape or stop automatically, and may result in damage to certain mechanical or electrical parts.

4-9-1. PRELIMINARY ADJUSTMENT PROCEDURE

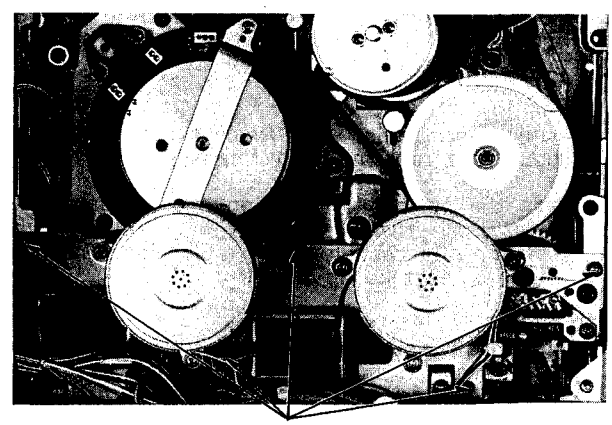

Figure M35 Sub-Chassis

Unscrew the 5 screws (A) (Figure M35) and remove the sub-chassis with Reel motors, fast, loosen the Hex Screws (B) (Figure M36) and remove the reel tables and remove the connectors.

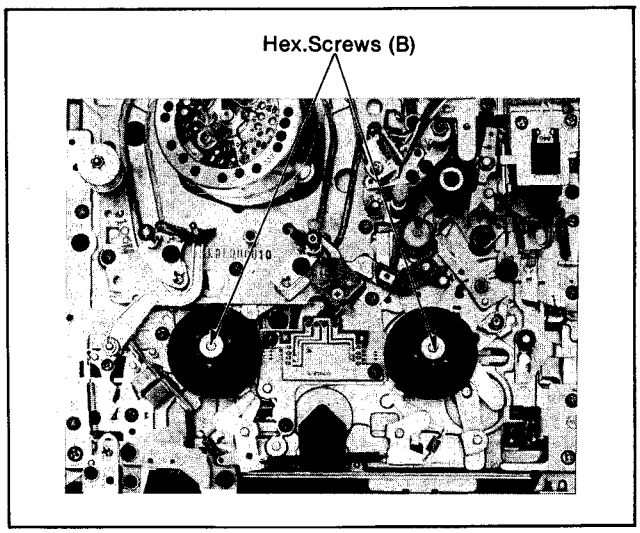

Figure M36 Reel Table

To remove the large pulley, unscrew the 1 screw (C) (Figure M37) and remove the 2 retaining rings (D), and remove the large pulley.

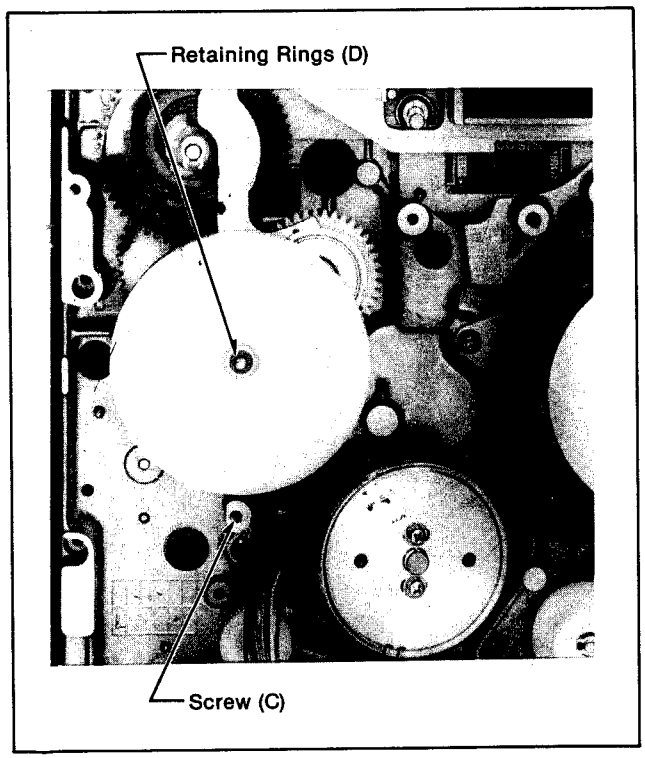

Figure M37 Large Pulley Belt Cover

To remove the sector gear, unscrew the 1 nut (E) (Figure M38) and remove the holder, then remove the 1 retaining ring (F) and remove the sector gear.

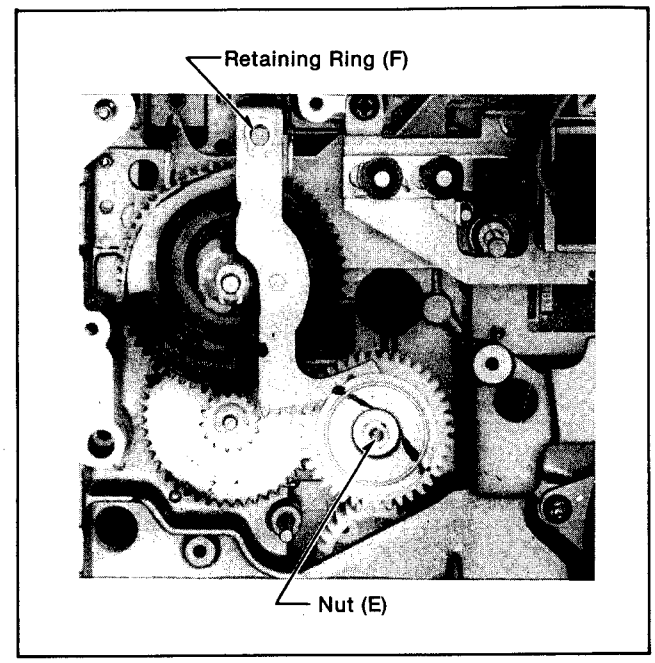

Figure M38 Select Gear

4-9-2. ADJUSTMENT PROCEDURE

1. Turn the Loading Gear clockwise until posts P2 and P3 are unloaded position. (Figure M39)

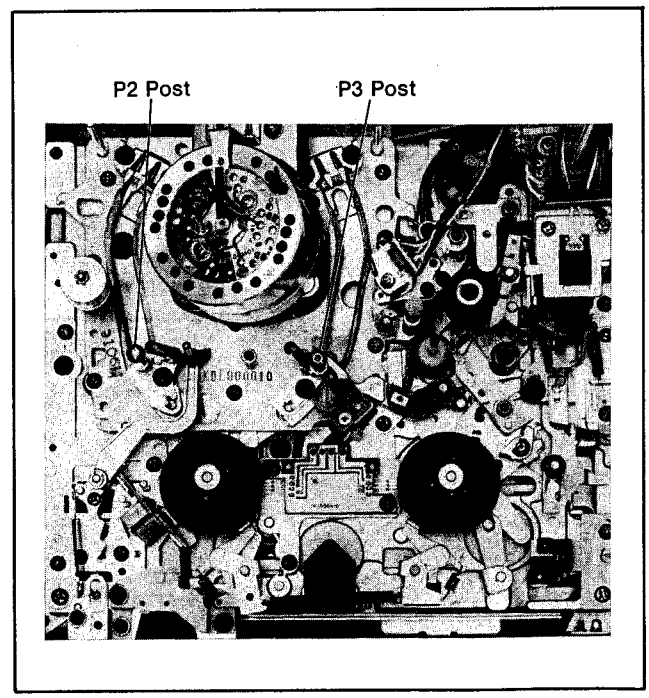

Figure M39 Unloding Position

2. Install the action gear so that the hole in the action gear meets the projection on the loading gear. Be sure that the loading gear is still in the fully unloaded condition. (Figure M40)

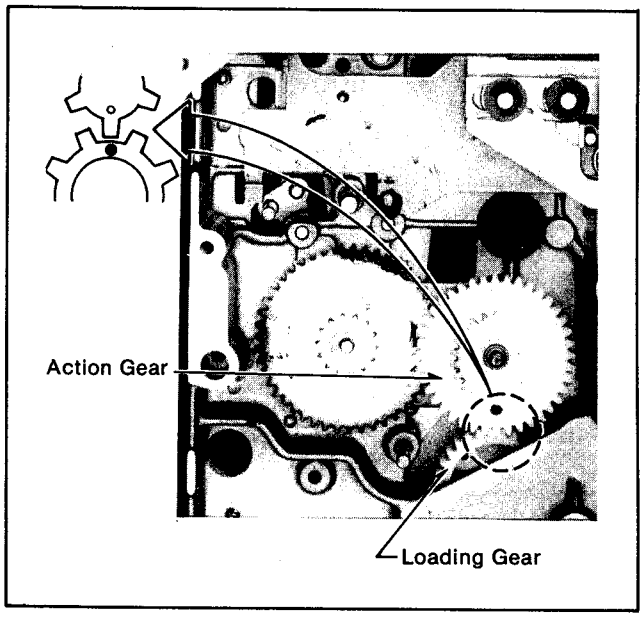

Figure M40

3. Slowly slide the main rod so that the holes meet together. (Figure M41)

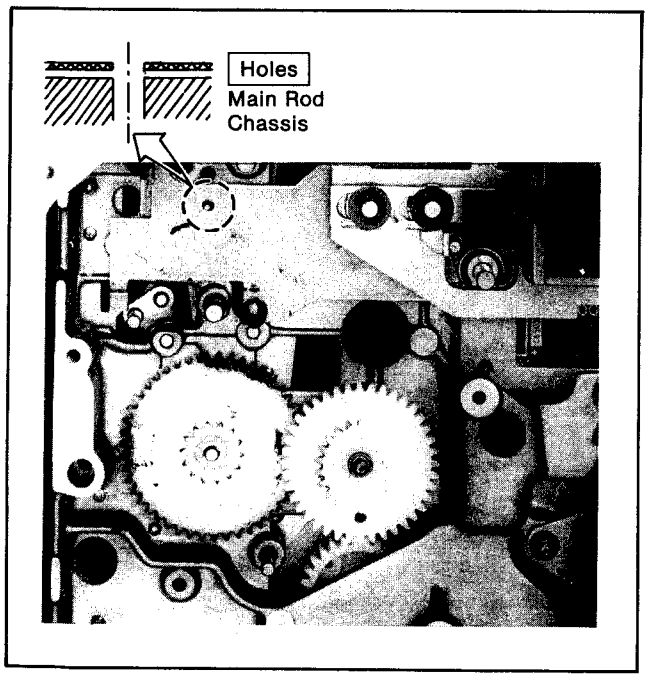

Figure M41

4. Insert the cam gear so that the hole (A) on the gear meets the hole in the main rod. To make alignment easier, use a small hex wrench (VFK0326) or metal pin. Check to see that the two V-shaped marks are still aligned. (Figure M42)

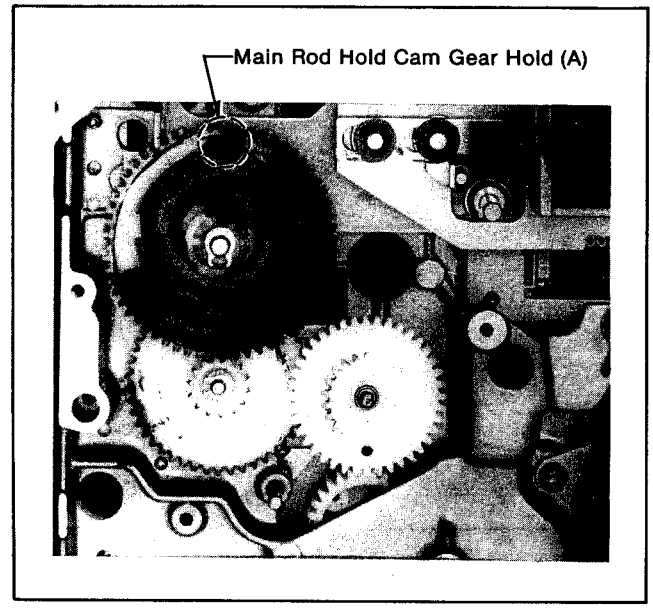

Figure M42

5. Install the sector gear so that the pin on the sector gear meets the inner slot of the cam gear (simple slot side). Install the 2 retaining rings on the cam and sector gears. (Figure M43)

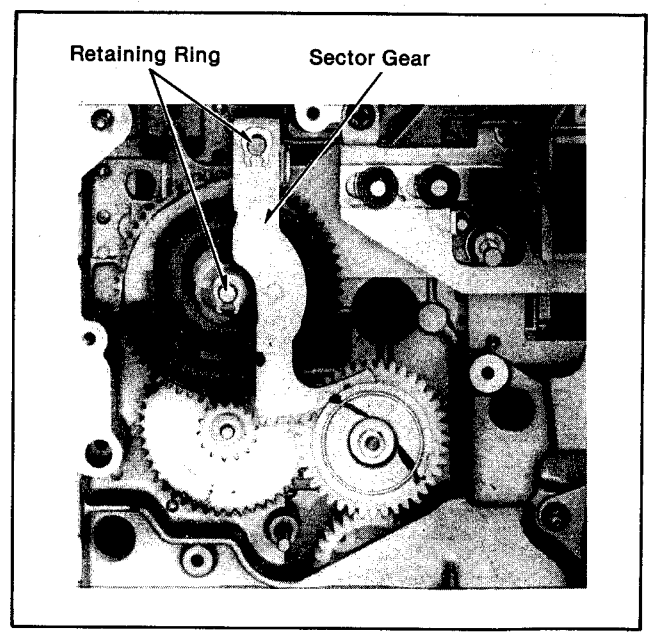

Figure M43

6. The gear configuration should now be as shown in Figure M44.

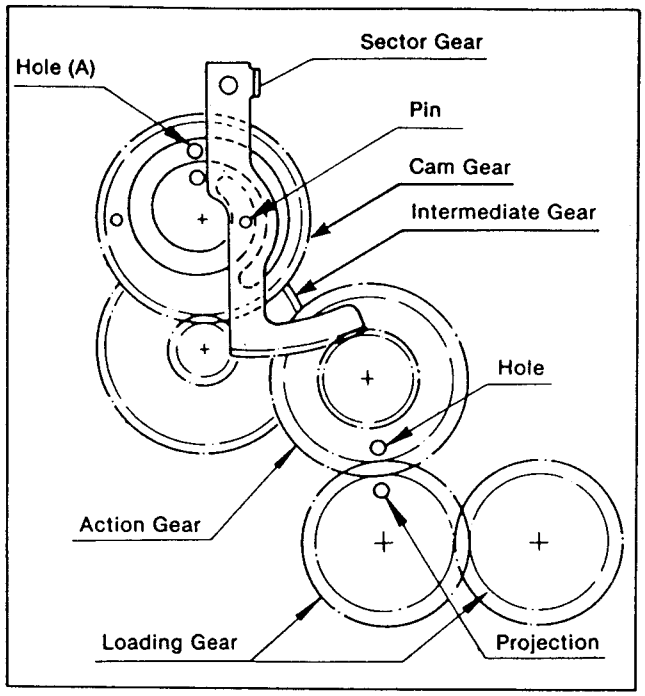

Figure M44

7. Install the gear protector and tighten the mounting nut.
Install the large gear so that the teeth of the gear mesh with the outer teeth of the intermediate gear, and install the retaining ring. (Figure M45)

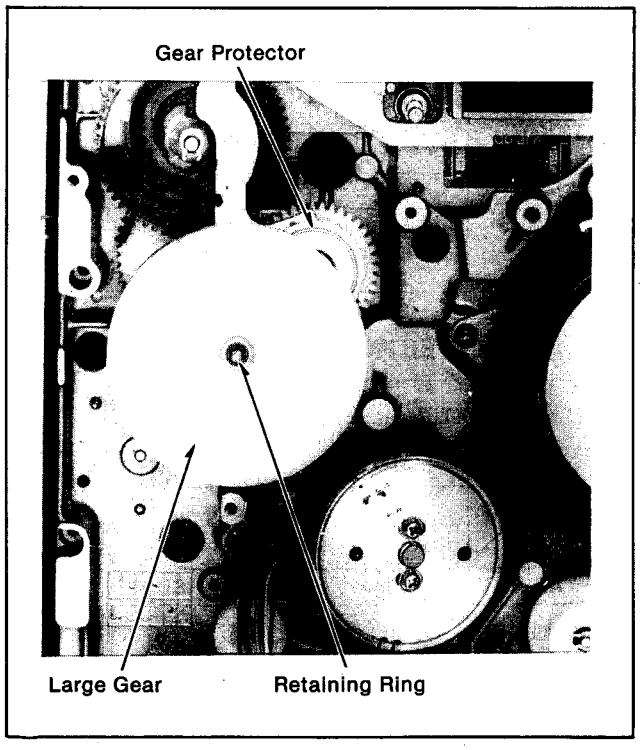

Figure M45

8. Install the belt. (Figure M46)
Turn the large pulley in both directions and confirm that the mechanism operates smoothly.

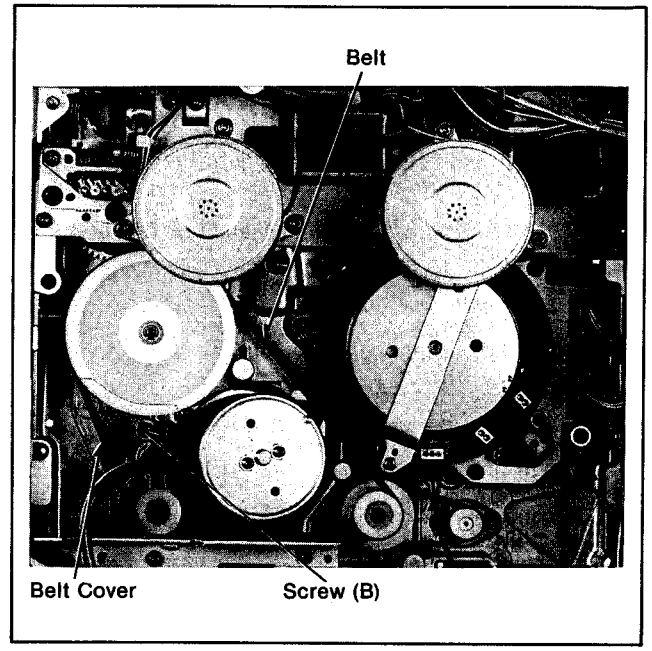

Figure M46

4-10. ADJUSTMENT OF THE MODE SELECT SWITCH

1. Set the main rod in the unloading completion condition.
2. To adjustment the mode select switch, loosen the 2 screws (A) then insert the fine adjustment screwdriver into the adjustment hole (B).
3. Align the V-shaped notch of the switch with the tab on the main rod. (Figure M47)

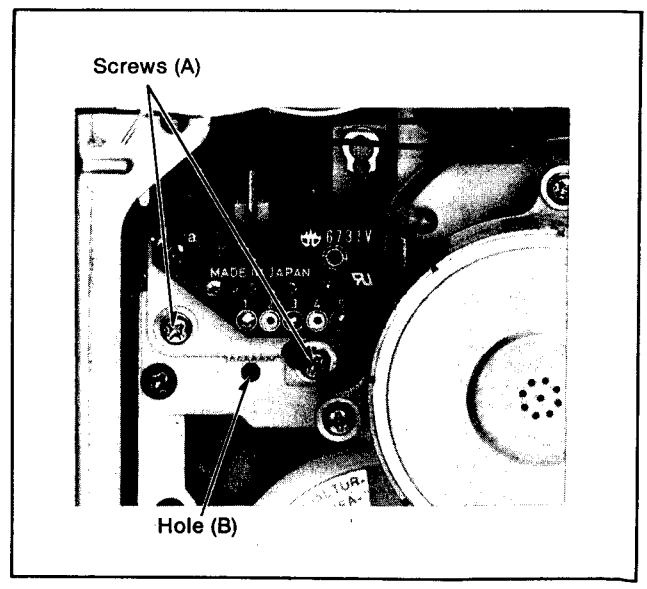

Figure M47

ELECTRICAL ADJUSTMENT PROCEDURES

This section provides complete electrical adjustment procedures which may be required for electronic circuits of S-VHS Video Cassette player.

1. TEST AND SERVICE EQUIPMENT

To perform the electrical adjustment completely, the following equipment is required.

1. VTVM(Vacuum Tube Volt Meter) or DVM(Digital Volt Meter)
   Voltage Range: 0.001 to 50V
2. Dual-Trace Oscilloscope
   Voltage Range: 0.005 to 50V/div.
   Frequency Range: DC to 20MHz
   Probes: 10:1 or 1:1
3. Frequency Counter
   Frequency Range: 0 to 10MHz
4. Signal Generator(Sinewave)
   Frequency Range: 0 to 10MHz
5. Video Sweep Generator
   Frequency Range: 0 to 10MHz
6. Colour Monitor TV
7. Plastic Tip Driver
8. Video Signal Generator (Sin^2 Pulse & Bar, Ramp)
9. VHS Alignment Tape (VFM8180HMDH)
10. PAL Colour Bar Recorded Tape (S-VHS mode)
11. Waveform Monitor

2. ADJUSTMENT PROCEDURES

2-1. HOW TO READ THE ADJUSTMENT PROCEDURES

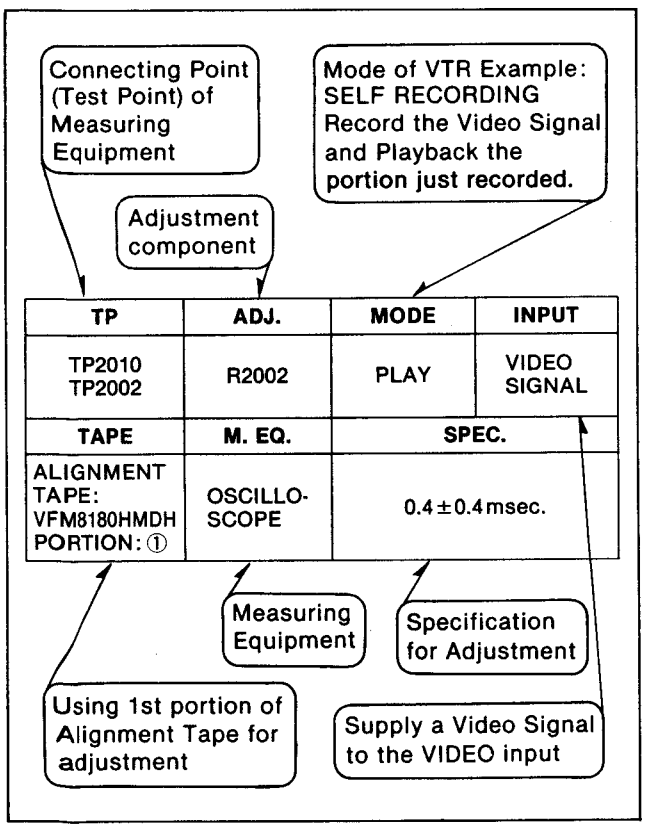

Figure E1

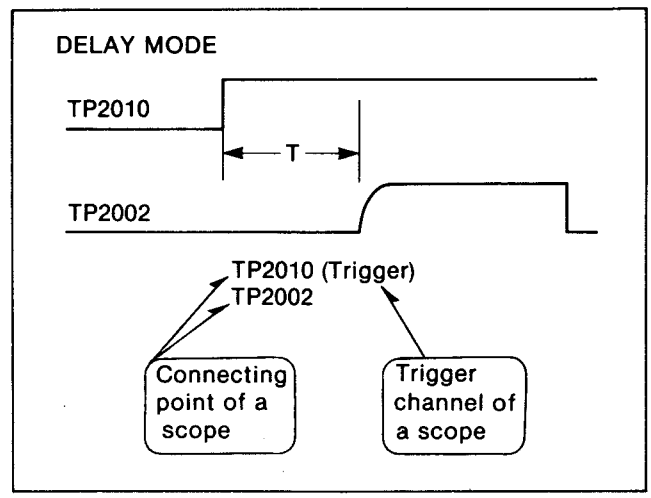

Figure E2

*Note:
1. An S-VHS tape should be prepared (recorded) using colour bars with a properly operated AG-7500 in the S-VHS mode. Then record a portion of the tape with colour bars in the VHS mode.
   This tape is required for adjustments:
2. An S-VHS tape should be prepared (recorded) using sin2 PULSE & BAR with a properly operated AG-7500 in the S-VHS mode.
   This tape is required for adjustment : 2-4-7

2-2. POWER SUPPLY SECTION

2-2-1. +5V ADJUSTMENT

TP	ADJ.	MODE	INPUT
TP1007	VR1001		
TAPE	**M. EQ.**	**SPEC.**	
	D.V.M.	5±0.1V	

2-3. SERVO SECTION

2-3-1. PG SHIFTER ADJUSTMENT

TP	ADJ.	MODE	INPUT
TP2001 TP2003	VR2002	PLAY	COLOUR BAR SIGNAL
TAPE	**M. EQ.**	**SPEC.**	
VFM8180HMDH PORTION: ②	OSCILLO-SCOPE	T=V. SYNC PORTION ±0.25H	

*Note:
This adjustment should be performed only after completion of the tape interchangeability adjustment.

1. Set the switch to the following position.
   *SYNC Select Switch-NORM position

2. Playback the alignment tape and set the TRACKING VR on the front panel to maximum envelope position at TP2 on the SUB VIDEO C.B.A.
3. Set the triggering slope of scope to "−" side, and expand the V sync portion of the signal. Adjust VR2008 (PG1) so that the falling edge of switching pulse becomes 6.5H +/− 0.25H before the V sync portion. (Figure E3)

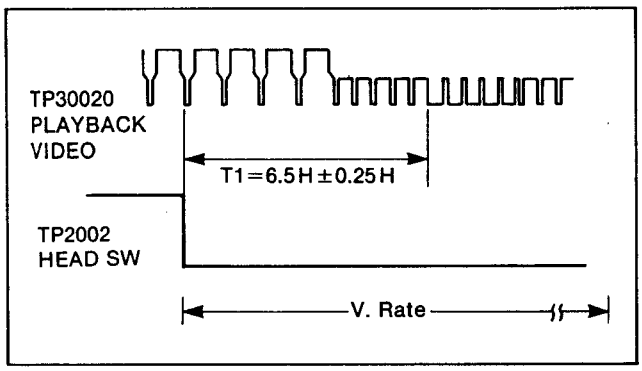

Figure E3

3. Change the triggering slope of the scope from "−" to "+" side, and adjust VR2007 (PG2) so that the difference between the rising and falling edges becomes less than 10usec. (Figure E4) difference between the rising and falling edges becomes less than 10 usec. (Figure E5)

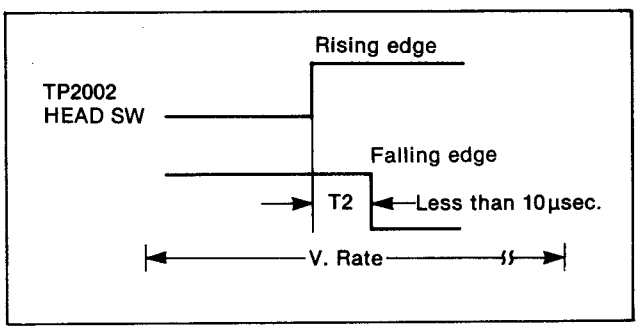

Figure E4

2-3-2. TRACKING FIX ADJUSTMENT

TP	ADJ.	MODE	INPUT
TP2001 TP2002	VR2001	PLAY	
TAPE	**M. EQ.**	**SPEC.**	
VFM8180HMDH PORTION: ②	OSCILLO- SCOPE	T=0.4msec.±0.1msec.	

1. Set the switches to the following position.
   * SYNC Select Switch–NORM position
2. Adjust the Tracking VR on the Front Panel to the centre fix position.

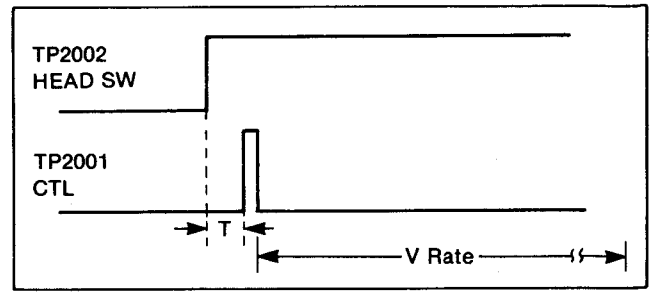

Figure E5

2-3-3. SS HEAD SWITCH ADJUSTMENT

TP	ADJ.	MODE	INPUT
TP30020 TP2010 (Trigger)	VR2011	PLAY (FWD×2)	
TAPE	**M. EQ.**	**SPEC.**	
VFM8180HMDH PORTION: ②	OSCILLO- SCOPE	T=V. SYNC PORTION ±0.25H	

*Note:
This adjustment should be performed only after adjusting the PG shifter adjustment.

1. Set the SYNC Select Switch to NORM position.
2. Press the SEARCH key and set the SEARCH DIAL to FWD X2 portion.

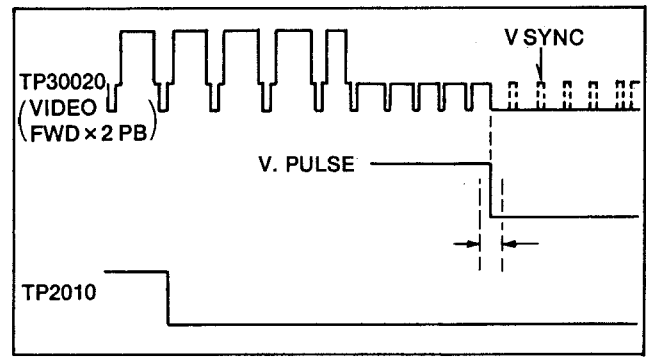

Figure E6

2-4. SYSTEM CONTROL SECTION

2-4-1. HD AUDIO HEAD SWITCH SHIFTER ADJUSTMENT

*Note:
This adjustment should be performed only after adjusting the PG shifter adjustment.

TP	ADJ.	MODE	INPUT
TP6005	VR6004	PLAY	
TAPE	**M. EQ.**	**SPEC.**	
VFM8180HMDH PORTION: ②	OSCILLO- SCOPE	T=13.33±0.03msec.	

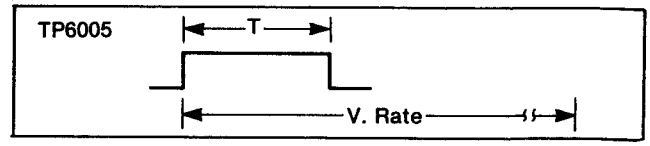

Figure E7

2-5. LUMINANCE, CHROMINANCE & HEAD AMP SECTION

2-5-1. PL. B MUTE ADJUSTMENT

TP	ADJ.	MODE	INPUT
TP8006 TP8004	VR8007	S-VHS PLAY	
TAPE	**M. EQ.**	**SPEC.**	
S-VHS COLOUR BAR	OSCILLO-SCOPE	1μs±100ns	

1. Play back the colour bar signal in S-VHS mode.
2. Connect the scope CH1 to TP8006 and CH2 to TP8004.

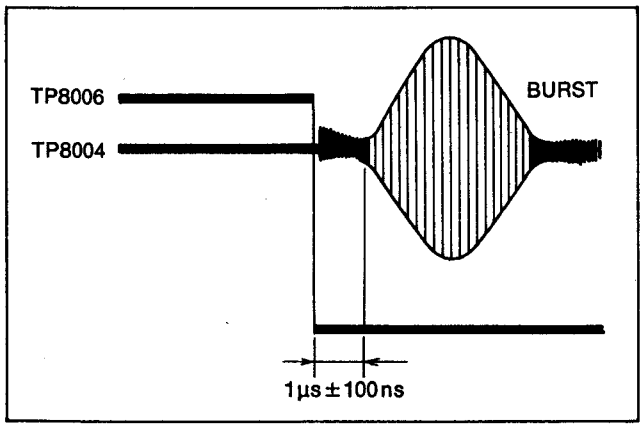

Figure E8

2-5-2. SUB EMPHASIS LIMITER ADJUSTMENT

TP	ADJ.	MODE	INPUT
TP30012	VR30052	S-VHS STOP (E-E)	
TAPE	**M. EQ.**	**SPEC.**	
	D.V.M.	3.33±0.03V	

2-5-3. DUB CHROMA OUTPUT LEVEL ADJUSTMENT

TP	ADJ.	MODE	INPUT
TP8004	VR8005	S-VHS PLAY	
TAPE	**M. EQ.**	**SPEC.**	
S-VHS COLOUR BAR	OSCILLO-SCOPE	900±20mVp-p	

1. Connect a resistor (1Kohm)between 1 pin and 2 pin on the DUB out connector or connect dubbing cable between the AG-7510 DUB out and the other VTR.
2. Play back the colour bar signal.

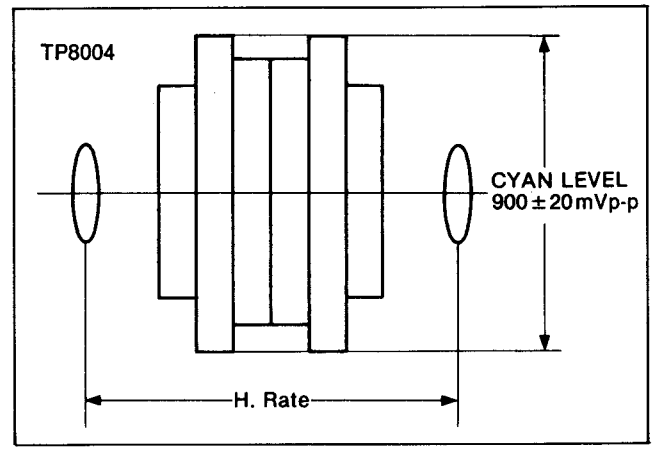

Figure E9

2-5-4. SUB EMPHASIS LEVEL ADJUSTMENT

TP	ADJ.	MODE	INPUT
TP30013	VR30051	S-VHS PLAY	
TAPE	**M. EQ.**	**SPEC.**	
S-VHS COLOUR BAR	OSCILLO-SCOPE	400±10mVp-p	

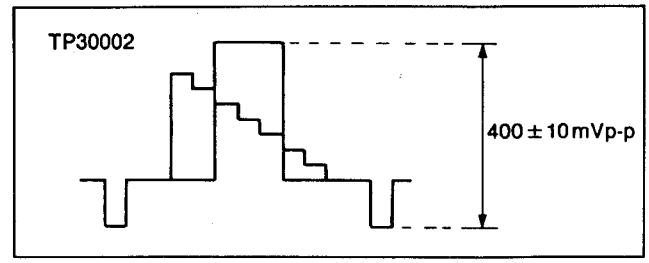

Figure E10

2-5-5. 4P Y LEVEL ADJUSTMENT

TP	ADJ.	MODE	INPUT
TP30022	VR30053 VR30058	VHS • S-VHS PLAY	
TAPE	**M. EQ.**	**SPEC.**	
VHS • S-VHS COLOUR BAR	OSCILLO-SCOPE	2.0±0.05Vp-p	

*Note:
Before this adjustment, "PLAYBACK SUB DEEMPHASIS LEVEL ADJUSTMENT" should be completed.

1. Play back the VHS colour bar signal and set the IMAGE switch to EDIT mode.
2. Connect the jumper wire between TP30019 and GND.
3. Adjust VR30058 to 2.0+/-0.05Vp-p at TP30022.
4. Play back the S-VHS colour bar signal.
5. Adjust VR30053 to 2.0+/-0.05Vp-p at TP30022.
6. Remove the jumper wire.

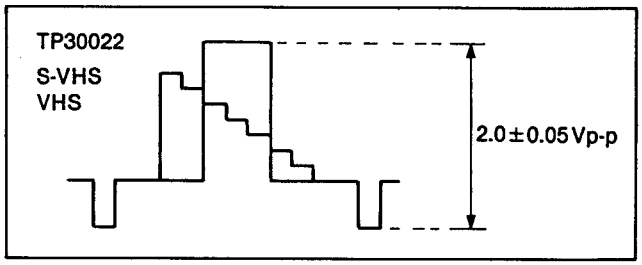

Figure E11

2-5-6. DROP OUT Y LEVEL ADJUSTMENT

TP	ADJ.	MODE	INPUT
TP30025	VR30057	S-VHS PLAY	
TAPE	**M. EQ.**	**SPEC.**	
S-VHS COLOUR BAR	OSCILLO-SCOPE	NO WAVEFORM	

1. Adjust VR30057 so that is no waveform at TP30025.

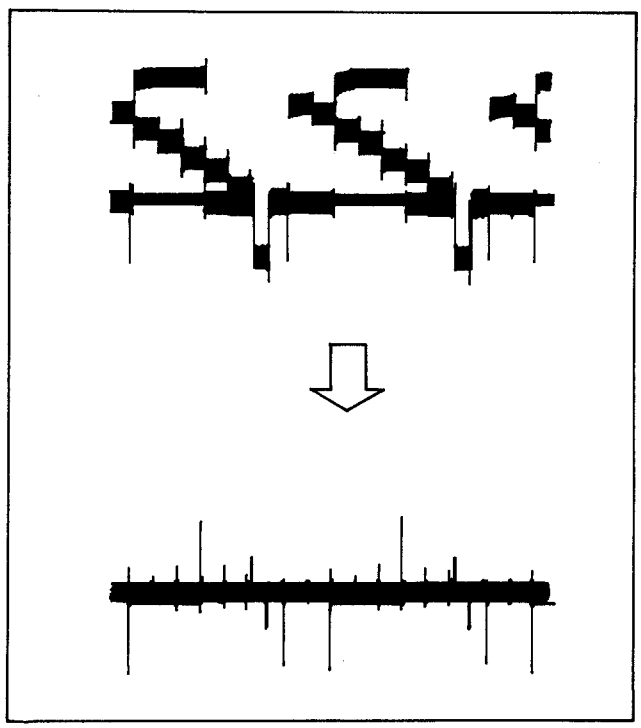

Figure E12

2-5-7. CCD BIAS ADJUSTMENT

TP	ADJ.	MODE	INPUT
TP30024	VR30064	S-VHS PLAY	
TAPE	**M. EQ.**	**SPEC.**	
S-VHS SIN^2 PULSE & BAR	OSCILLO-SCOPE	2T PULSE: MAXIMUM	

*Note:
Before this adjustment, "4P Y LEVEL ADJUSTMENT" should be completed.

1. Set the image switch to NORMAL mode.
2. Play back a sin^2 PULSE & BAR signal recorded tape.
3. Adjust VR30064 so that the gain of 2T pulse is maximum.

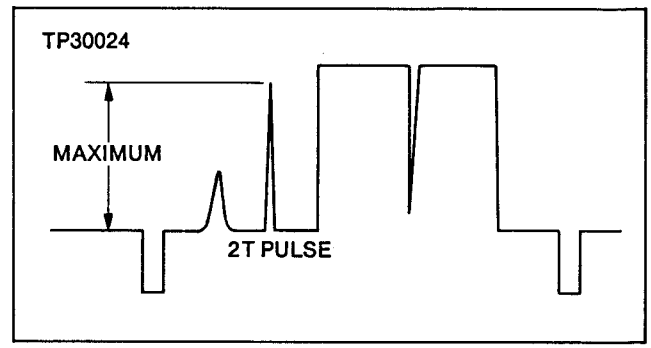

Figure E13

2-5-8. CCD OUTPUT LEVEL ADJUSTMENT

TP	ADJ.	MODE	INPUT
TP30022	VR30067	S-VHS PLAY	
TAPE	**M. EQ.**	**SPEC.**	
S-VHS COLOUR BAR	OSCILLO-SCOPE	2±0.05Vp-p	

*Note:
Before this adjustment, "4P Y LEVEL ADJUSTMENT" and "CCD BIAS ADJUSTMENT" should be performed.

1. Set the image switch to NORMAL mode.

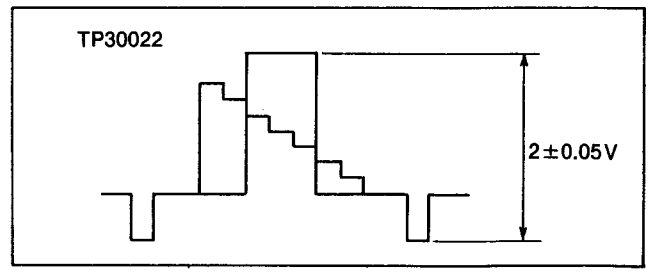

Figure E14

2-5-9. DUB OUTPUT LEVEL ADJUSTMENT

TP	ADJ.	MODE	INPUT
TP30023	VR30063	S-VHS PLAY	
TAPE	**M. EQ.**	**SPEC.**	
S-VHS COLOUR BAR	OSCILLO-SCOPE	1±0.1Vp-p	

*Note:
Before this adjustment, "4P Y LEVEL ADJUSTMENT" should be performed.

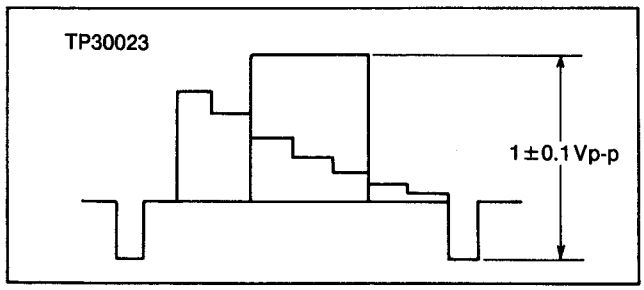

Figure E15

2-5-10. RECURSIVE LEVEL ADJUSTMENT

TP	ADJ.	MODE	INPUT
TP30016	VR30061	S-VHS PLAY	
TAPE	**M. EQ.**	**SPEC.**	
S-VHS COLOUR BAR	OSCILLO-SCOPE	CYAN LEVEL= 500±50mVp-p	

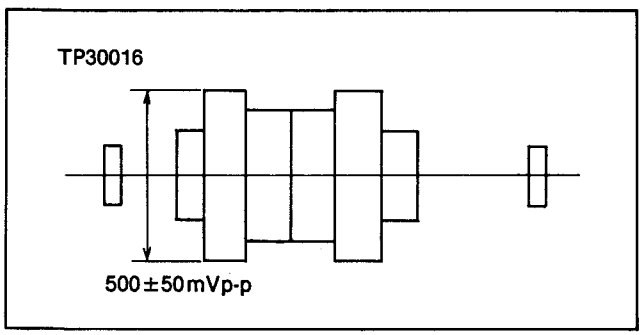

Figure E16

2-5-11. RECURSIVE FILTER ADJUSTMENT

TP	ADJ.	MODE	INPUT
TP30017	VR30060 VR30059	S-VHS PLAY	
TAPE	**M. EQ.**	**SPEC.**	
S-VHS COLOUR BAR	OSCILLO-SCOPE	A=MINIMUM	

1. Adjust VR30060 and VR30059 so that level "A" becomes minimum.

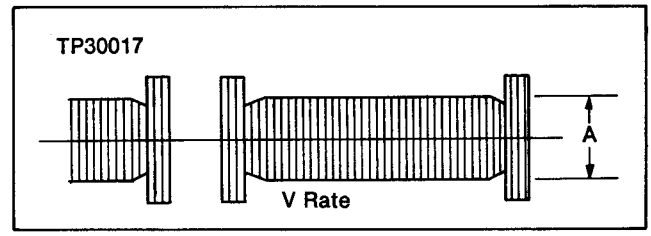

Figure E17

2-5-12. S-VIDEO C OUTPUT LEVEL ADJUSTMENT

TP	ADJ.	MODE	INPUT
TP30021	VR30068	S-VHS PLAY	
TAPE	**M. EQ.**	**SPEC.**	
S-VHS COLOUR BAR	OSCILLO-SCOPE	1.3±0.06Vp-p	

*Note:
Before this adjustment, "Recursive Level Adjustment" and "Recursive Filter Adjustment" should be completed.

1. Adjust VR30068 so that the cyan level becomes 1.3+/−0.06Vp−p at TP30021.

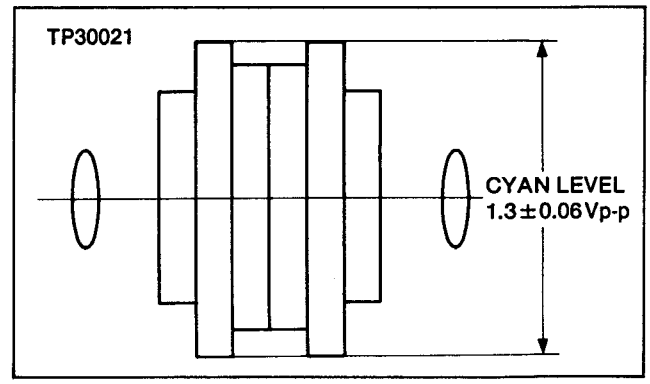

Figure E18

2-5-13. VIDEO OUTPUT LEVEL ADJUSTMENT

TP	ADJ.	MODE	INPUT
VIDEO LINE OUT	VR30055 VR30062	S-VHS PLAY	
TAPE	**M. EQ.**	**SPEC.**	
S-VHS COLOUR BAR	WAVEFORM MONITOR	1.0±0.02Vp-p (VIDEO LEVEL) 0.6±0.03Vp-p (CYAN LEVEL)	

*Note:
Before this adjustment, "Recursive Filter Adjustment", "4P Y Level Adjustment", "S-VIDEO C Output Level Adjustment" and "CCD Output Level Adjustment" should be completed.

1. Supply the Video Output Signal to a waveform monitor.
2. Adjust VR30055 so that the video level becomes 1.0+/−0.02Vp−p.
3. Adjust VR30062 so that the cyan level becomes 0.6+/−0.03Vp−p

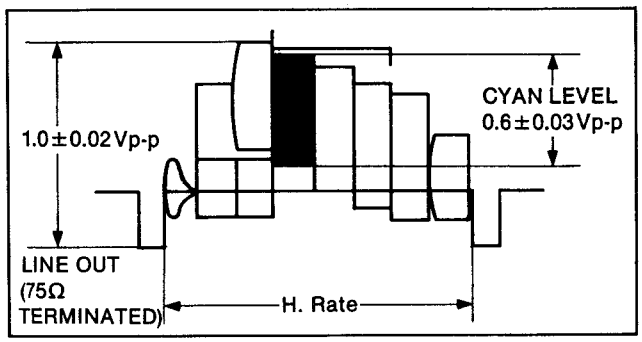

Figure E19

2-5-14. S-VHS DETECT LEVEL ADJUSTMENT

TP	ADJ.	MODE	INPUT
TP31004	VR5001	S-VHS PLAY	
TAPE	**M. EQ.**	**SPEC.**	
S-VHS COLOUR BAR	OSCILLO-SCOPE	200±20mVp-p	

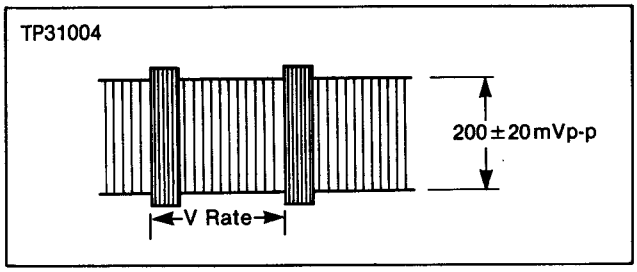

Figure E20

2-5-15. S-VHS RF EQUALIZER ADJUSTMENT

TP	ADJ.	MODE	INPUT
TP31005 TP30022	VR31001 VR31009 VR31011	PLAY	
TAPE	**M. EQ.**	**SPEC.**	
PREPARATION TAPE	OSCILLO-SCOPE	REFFER to FIGURE E21	

Preparation

AG−7500 VCR

1. Turn the S−VHS SW ON and Notch Filter OFF, and set the image switch to EDIT mode.
2. Connect a jumper wire between IC30001−7 and GND.
3. Input a video sweep signal to 4P S−VIDEO IN connector−3 (HOP) and 1 (GND).
4. Record this signal.

Adjustment

1. Play back this tape.
2. Set the image switch to EDIT mode and turn the Notch Filter OFF.
3. Connect a jumper wire between TP30019 and GND.
4. Set VR31009 and VR31001 to centre position.
5. Connect TP31005 to the scope and pre−adjust VR31001 so that the envelope becomes 900mVp−p.
6. Connect TP30022 to the scope and adjust VR31009 and VR31011 so that the level becomes as shown in Figure E21, with minimum distortion.
7. Remove the jumper wire.

*Note:
After this adjustment, "S−VHS RF Level Adjustment" should be neccessory.

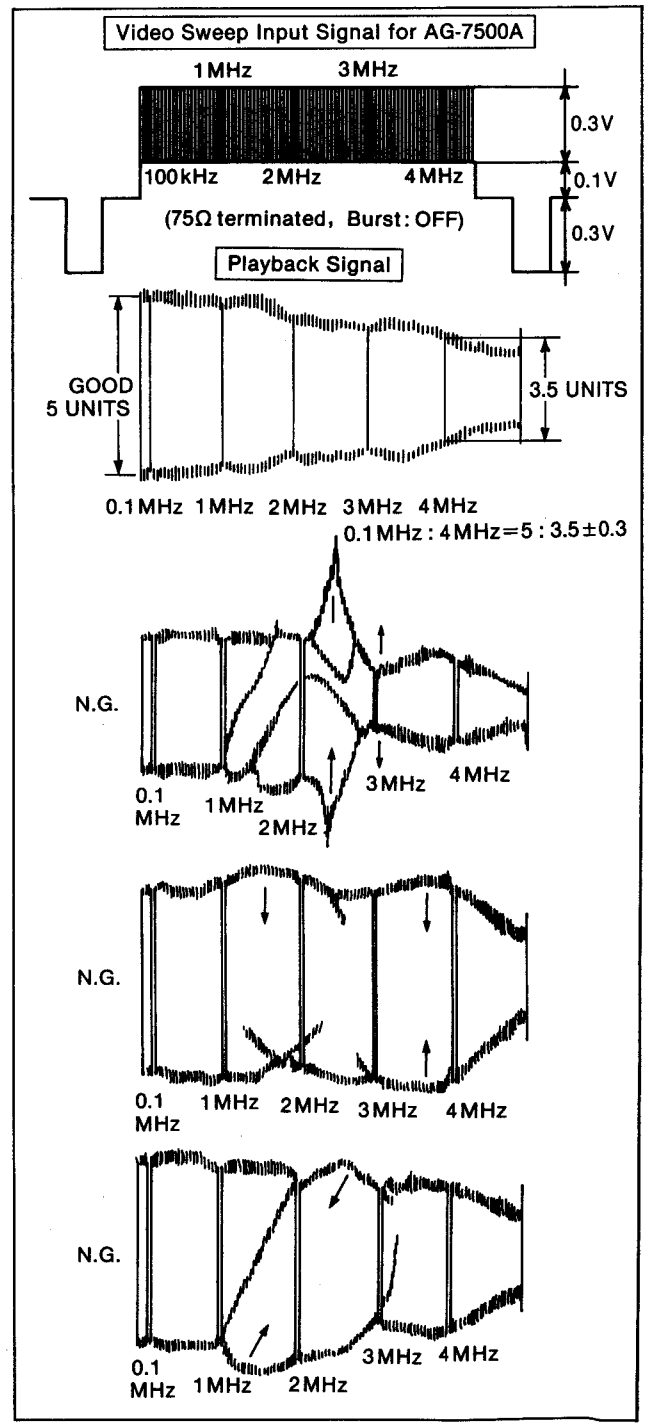

Figure E21

2-5-16. S-VHS RF LEVEL ADJUSTMENT

TP	ADJ.	MODE	INPUT
TP31005	VR31001	S-VHS PLAY	
TAPE	**M. EQ.**	**SPEC.**	
S-VHS COLOUR BAR	OSCILLO-SCOPE	750±50mVp-p 900±50mVp-p	

*Note:
Before this adjustment, "S-VHS RF EQ ADJUSTMENT" should be completed.

1. Record a colour bar signal and play back just recorded portion.
2. Connect the scope to TP31005.
3. Adjust VR31001 to 900+/−50mVp−p.

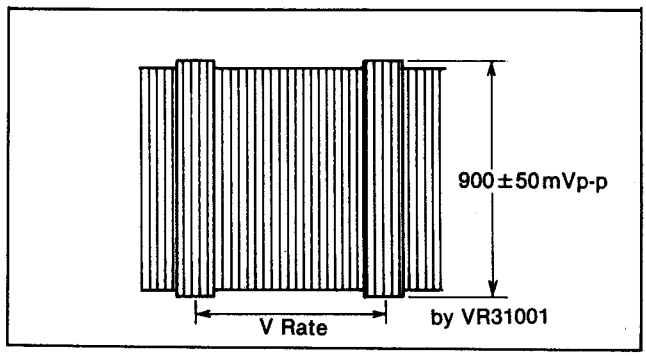

Figure E22

2-5-17. SS RF EQ ADJUSTMENT

TP	ADJ.	MODE	INPUT
TP30022	VR31008 VR31010	S-VHS STILL	
TAPE	**M. EQ.**	**SPEC.**	
S-VHS PREPARED TAPE	OSCILLO-SCOPE	100kHz : 3MHz=5 : 2.7±0.5	

*Note:
Before this adjustment, "S-VHS RF EQ ADJUSTMENT" should be completed.

1. Play back the S-VHS sweep signal recorded in the "S-VHS RF EQ ADJUSTMENT".
2. Set the deck to STILL mode.
3. Connect the scope to TP30022.
4. Adjust VR31008 and VR31010 as shown below.

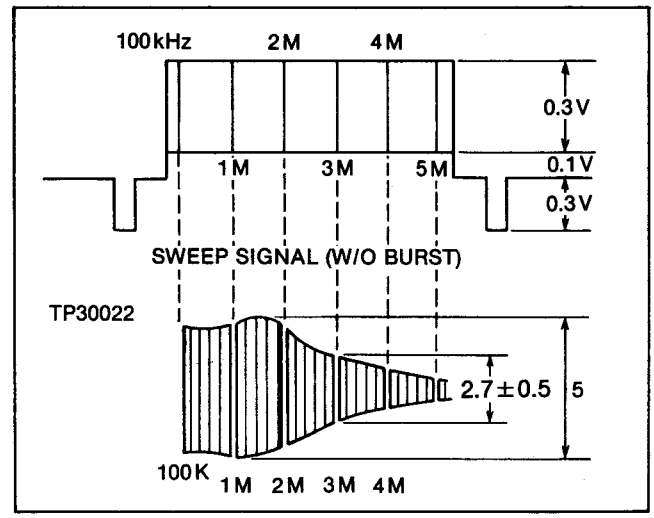

Figure E23

2-5-18. RF OUT LEVEL ADJUSTMENT

TP	ADJ.	MODE	INPUT
TP31003	VR31005	S-VHS PLAY	
TAPE	**M. EQ.**	**SPEC.**	
S-VHS COLOUR BAR	OSCILLO-SCOPE	1.0±0.1Vp-p	

*Note:
Before this adjustment, "S-VHS RF EQ ADJUSTMENT", "TRACKING FIX ADJUSTMENT" and "RF LEVEL ADJUSTMENT" should be completed.

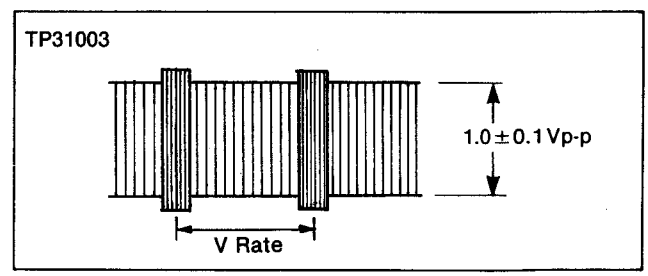

Figure E24

2-5-19 VHS RF EQUALIZER ADJUSTMENT

TP	ADJ.	MODE	INPUT
TP30022 TP31005	VR31002 VR31004 VR31003	VHS PLAY	
TAPE	**M. EQ.**	**SPEC.**	
PREPARATION TAPE	OSCILLO-SCOPE	REFER to FIGURE E23	

*Note:
Before this adjustment, "S-VHS RF EQUALIZER ADJUSTMENT" and "S-VHS RF LEVEL ADJUSTMENT" Should be completed.

Preparation

AG-7500 VCR

1. Turn the S-VHS SW OFF, and Notch Filter OFF.
2. Input a video sweep signal to the VIDEO IN CONNECTOR.
3. Record this signal.

Adjustment

1. Play back this tape.
2. Set the image switch to EDIT mode, S-VHS switch OFF and notch filter OFF.
3. Turn VR31002 and VR31003 to centre position.
4. Connect TP31005 to the scope and adjust VR31004 so that the levels become 900mVp-p.
6. Connect TP30022 to the scope.

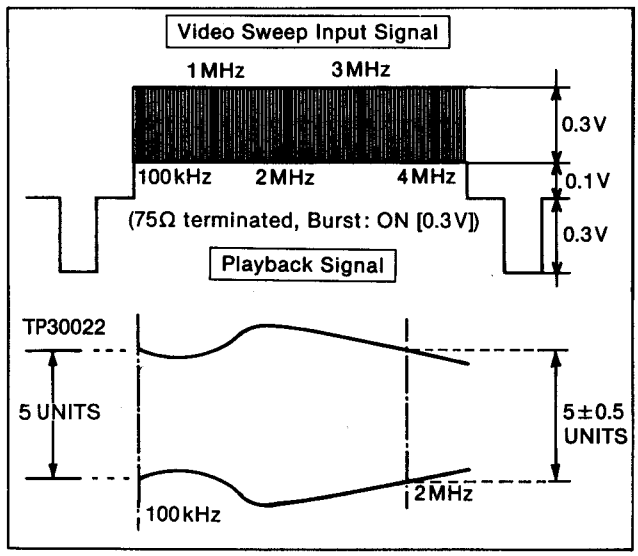

Figure E25

5. Adjust VR31002 and VR31003 so that the envelope becomes as shown in Figure E25.
6. Repeat steps 4 and 5 to meet specifications.

2-5-20. DG COMPENSATION ADJUSTMENT

TP	ADJ.	MODE	INPUT
VIDEO OUT	VR8004	PLAY	
TAPE	**M. EQ.**	**SPEC.**	
PREPARATION TAPE	WAVE FORM MONITOR	A=5±5%	

*Note:
Before this adjustment, "DUB Y OUT Level Adjustment" should be completed.

Preparation

AG-7500 VCR

1. Turn the S-VHS SW ON.
2. Supply a 5 step video signal or Ramp signal to the VIDEO IN connector and make a short recording.

Adjustment

1. Play back the recorded tape.
2. Connect a waveform monitor to VIDEO OUT connector and set response switch on the monitor to 4.43 (chroma) position.
3. Adjust VR8004 as shown in Figure E26.

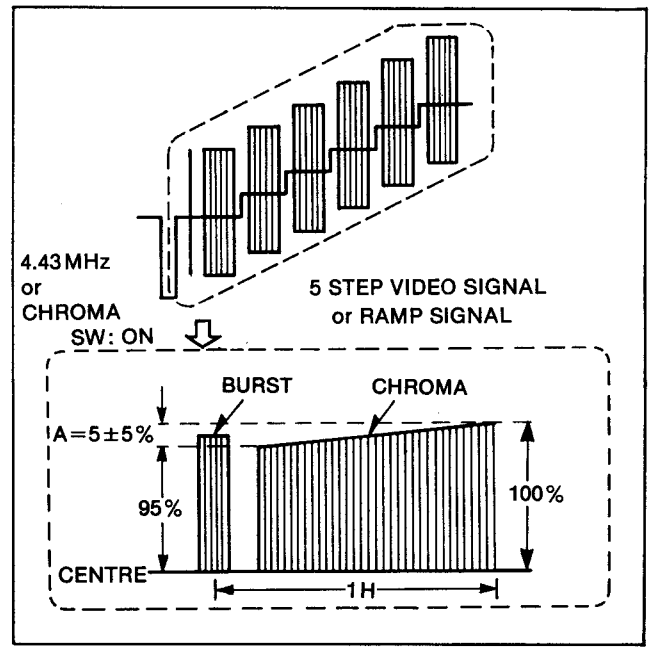

Figure E26

2-5-21. Y/C TIMING ADJUSTMENT

TP	ADJ.	MODE	INPUT
VIDEO OUT	DL8008 DL8011	PLAY	
TAPE	**M. EQ.**	**SPEC.**	
PREPARED TAPE	WAVE FORM MONITOR	Y/C TIMING=+50±100nsec.	

*Note:
Before this adjustment, "S-VHS RF EQUALIZER ADJUSTMENT", "VHS RF EQUALIZER ADJUSTMENT" and "VIDEO OUTPUT LEVEL ADJUSTMENT" should be performed.

Pre paration

AG-7500 VCR

1. Turn the S-VHS SW on.
2. Supply a pulse & bar signal to the VIDEO IN connector and make a recording.

Adjustment

1. Set the image switch to EDIT mode.
2. Connect the waveform monitor to the VIDEO OUT connector and expand the Y/C timing portion.
3. Confirm Y/C timing so that the "A" portion is less than 4% as shown in Figure E27.

4. If it is not, change the soldered positions of DL8008 and DL8011(DL8008 : 2 --> 1, DL8011 : 2 --> 4) so that Y/C timing becomes less than 4% as shown in Figure E28.

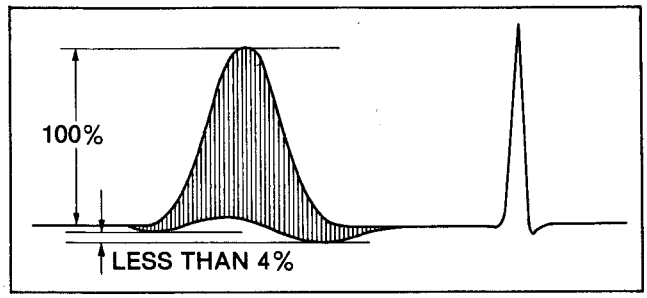

Figure E27

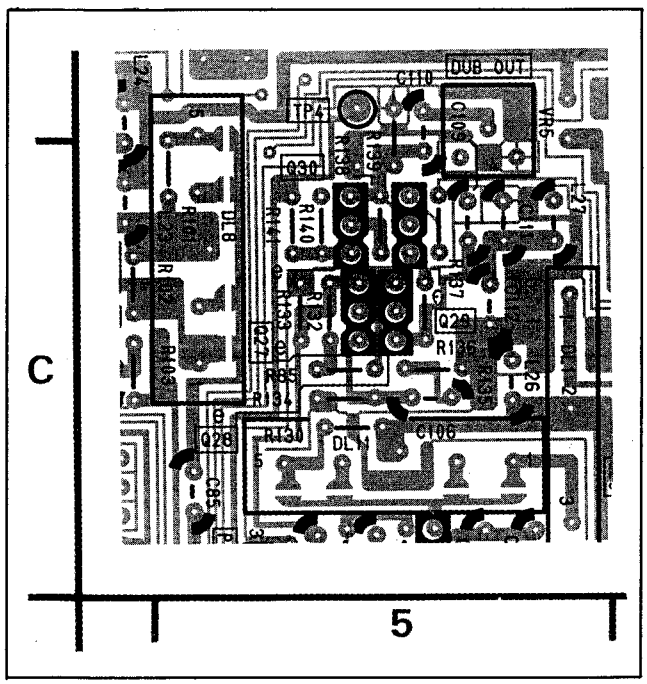

Figure E28

2-5-22. TRACKING METER ADJUSTMENT

TP	ADJ.	MODE	INPUT
TRACKING METER	VR31006	S-VHS PLAY	
TAPE	**M. EQ.**	**SPEC.**	
S-VHS COLOUR BAR		SEE FIGURE E29	

*Note:
Before this adjustment, "TRACKING FIX ADJUSTMENT", "S-VHS RF EQ ADJUSTMENT" and "RF LEVEL ADJUSTMENT" should be completed.

1. Turn the S-VHS SW ON.
2. Play back the S-VHS colour bar tape.
3. Set the TRACKING VR on the front panel to the centre.
4. Adjust VR31006 so that the TRACKING METER needle reaches "3.5+/-1.0" as shown in Figure E29.

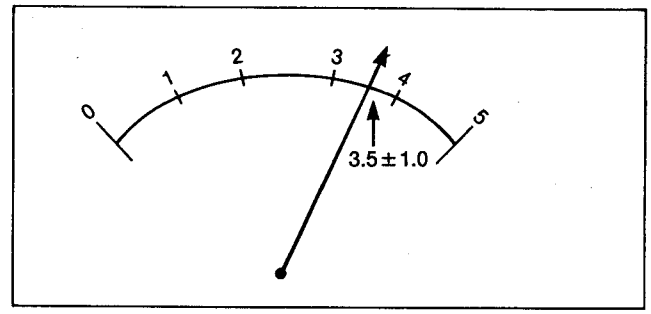

Figure E29

2-6. NORMAL AUDIO SECTION

*Note:
Unless otherwise specified, set the following switches to the following positions.

SWITCH/VR	POSITION
DOLBY NR	OFF
AUDIO OUT LEVEL SELECT	0dBs

Also the following connection is used to check the output levels from AUDIO OUT jacks (XLR).

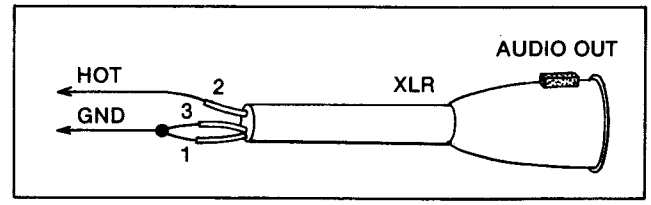

Figure E30

2-6-1. AUDIO INPUT SIGNAL LEVEL ADJUSTMENT

TP	ADJ.			MODE	INPUT
NORM/HD OUT (CH1/CH2)		NORM	HD	PLAY	
	CH1	VR6303	VR6301		
	CH2	VR6304	VR6302		
TAPE	**M. EQ.**			**SPEC.**	
PREPARATION TAPE	V.T.V.M. w/600Ω TERMI-NATION			0±0.2dBm (=0.775Vrms=2.19Vp-p)	

*Note:
1. Set the PB LEVEL VR to click point.
2. Before this adjustment, "NORMAL AUDIO PLAYBACK GAIN ADJUSTMENT" and "HD AUDIO PLAYBACK GAIN ADJUSTMENT" should be performed.
3. Set the AUDIO OUT GAIN SELECTION switch on the back panel to 0dB.

Preparation

AG-7500 VCR

1. Supply a 1KHz sinewave signal (0dBm=0.075Vrms=2.19Vp-p) to the Audio Input of properly operated AG-7500 and record this signal at HD mode.

Adjustment

1. Set the AUDIO OUT SELECT switch on the pocket SW to NORM position.
2. Adjust VR6303 and VR6304 on the front panel C.B.A. to +2+/-0.5dBm.
3. Set the AUDIO OUT SELECT switch on the pocket SW to HD position.
4. Adjust VR6301 and VR6302 on the front panel C.B.A. to 0+/-0.5dBm.

2-6-2. AUDIO JACK ADJUSTMENT

TP	ADJ.			MODE	INPUT
NORM/HD OUT (CH1/CH2)		NORM	HD	PLAY	
	CH1	VR4507	VR4505		
	CH2	VR4508	VR4506		
TAPE	M. EQ.			SPEC.	
PREPARATION TAPE	VTVM			68mVrms OR LESS	

Preparation

AG-7500 VCR

1. Supply a 1KHz sinewave signal (0dBm=0.775Vrms=2.19Vp-p) to the Audio Input of properly operated AG-7500 and record this signal at HD mode.

Adjustment

1. Set the Audio Out Select SW to "NORM".
2. Play back the portion just recorded.
3. Adjust VR4507 (CH1) and VR4508 (CH2) so that the level becomes 68mVrms or less.
4. Set the Audio Out Select SW to "HD".
5. Adjust VR4505 (CH1) and VR4506 (CH2) so that the level becomes 68mVrms or less.

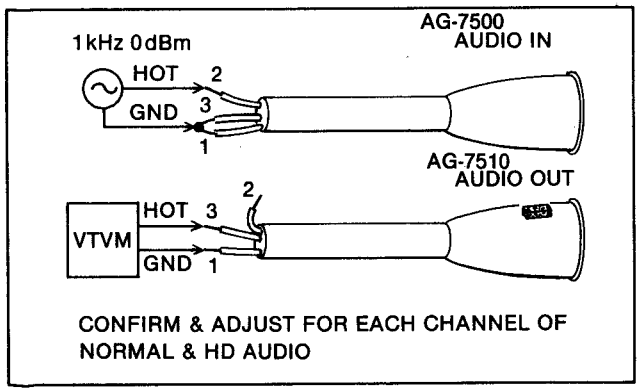

Figure E31

2-6-3. AUDIO METER ADJUSTMENT

TP	ADJ.	MODE	INPUT
	VR4009 (CH1) VR4010 (CH2)	PLAY	
TAPE	M. EQ.	SPEC.	
-8dBV AUDIO SIGNAL		SEE FIGURE E32	

*Note:
Before this adjustment "AUDIO OUTPUT LEVEL ADJUSTMENT" should be completed.

Preparation

AG-7500 VCR

1. Supply a 1KHz sinewave signal (-8dBm=0.41Vrms=1.13Vp-p) to the Audio Input of properly operated AG-7500 and record this signal.

Adjustment

1. Set the Meter switch to NORMAL position and the Audio PB level VRs on the front panel to the center fixed position.
2. Play back the portion just recorded.
3. Adjust VR4009 (CH1) and VR4010 (CH2) so that the needle of Audio Meter shows OVU as shown in Figure E32.

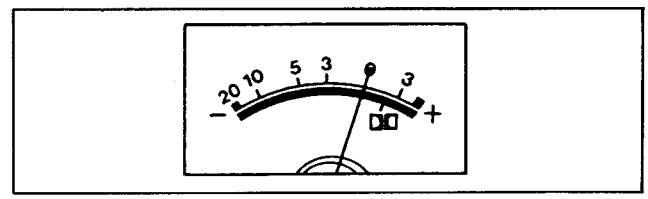

Figure E32

2-6-4. NORMAL AUDIO PLAYBACK FREQUENCY RESPONSE ADJUSTMENT

TP	ADJ.	MODE	INPUT
TP4001 (CH1) TP4002 (CH2)	VR4001 (CH1) VR4004 (CH2)	PLAY	
TAPE	M. EQ.	SPEC.	
VFM8180HMDH PORTION: ③	OSCILLO-SCOPE	400Hz AND 5kHz PORTIONS SHOULD BE SAME LEVEL (0±0.5dB)	

*Note: 1. Before attempting to adjust the Audio Frequency Response, set the VR4001 and VR4004 to the centre position.
2. This adjustment must be completed before performing "Normal Audio Playback Gain Adjustment".

1. The gains of 400Hz and 5KHz portions should be the same level (0+/−0.5dB).

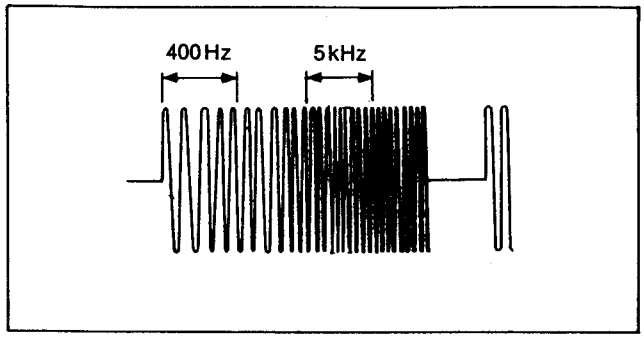

Figure E33

2-6-5. NORMAL AUDIO PLAYBACK GAIN ADJUSTMENT

TP	ADJ.	MODE	INPUT
NORMAL TP4001 (CH1) TP4002 (CH2)	VR4002 (CH1) VR4005 (CH2)	PLAY	
TAPE	**M. EQ.**	**SPEC.**	
VFM8180HMDH PORTION: ③	V.T.V.M.	300±15mVp-p (CH1) 310±15mVp-p (CH2)	

*Note:
Before this adjustment "Audio Playback Frequency Response Adjustment" should be completed.

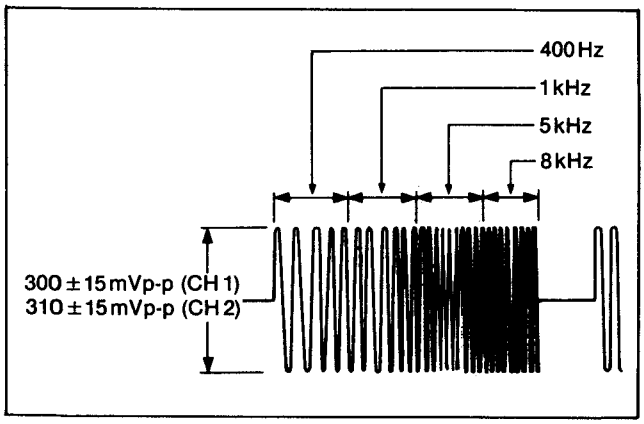

Figure E34

2-6-6. TIME CODE METER ADJUSTMENT

TP	ADJ.	MODE	INPUT
	VR4007	PLAY	
TAPE	**M. EQ.**	**SPEC.**	
BLANK		3.5±1.0	

Preparation

AG−7500 VCR

1. Set the AUDIO CH2 SELECT SW on the rear panel to TIME CODE.
2. Supply a 2KHz, 1Vp−p sine wave signal to the TIME CODE IN connecter.
3. Record this signal.

Adjustment

1. Set the AUDIO CH2 SELECT SW on the rear panel to TIME CODE.
2. Play back this tape.
3. Adjust VR4007 so that the AUDIO CH2 LEVEL METER reaches the "3.5 +/−1.0" point.

2-7. HD AUDIO SECTION

*Note:
Unless otherwise specified, set the following switches to the following positions.

SWITCH	POSITION
AUDIO MONITOR (HD/NORM)	HD
AUDIO OUT SELECT	HD
AUDIO INPUT LEVEL SELECT/ AUDIO OUT LEVEL SELECT	0dBs

2-7-1. HD CARRIER FREQUENCY ADJUSTMENT

TP	ADJ.	MODE	INPUT
TP4308 TP4309	VR4303 VR4308	STOP	
TAPE	**M. EQ.**	**SPEC.**	
	FREQUENCY COUNTER	f_L=1.4MHz±10kHz (TP4308) f_R=1.8MHz±10kHz (TP4309)	

1. If signal level is too low to trigger the (CH2) clockwise.
Refer to "HD AUDIO REC CURRENT ADJUSTMENT" for the correct setting of these VRs after this adjustment.

2-7-2. HD AUDIO PLAYBACK GAIN ADJUSTMENT

TP	ADJ.	MODE	INPUT
TP4306 (CH1) TP4307 (CH2)	VR4301 (CH1) VR4306 (CH2)	PLAY	
TAPE	**M. EQ.**	**SPEC.**	
VFM8180HMDH PORTION: ①	V.T.V.M.	−7dBV±1	

2-7-3. HD AUDIO MUTING LEVEL ADJUSTMENT

TP	ADJ.	MODE	INPUT
AUDIO OUT, TP4803	VR4801	PLAY	
TAPE	**M. EQ.**	**SPEC.**	
VFM8180HMDH PORTION: ①	OSCILLO-SCOPE	ENVELOPE LEVEL "A" × 3.3	

1. Connect the scope CH1 to the HD CH1 output, and play back the alignment tape.
2. Adjust VR4801 slowly clockwise untill the HD audio signal at the HD Audio Output is muted off.
3. Connect the scope to TP4803 and measure the level of HD Audio FM envelope "A".
4. Adjust VR4801 so that the level of HD Audio FM envelope becomes 3.3 +0.3/−0 times of "A" level (muting level x 3.3 +0.3/−0).

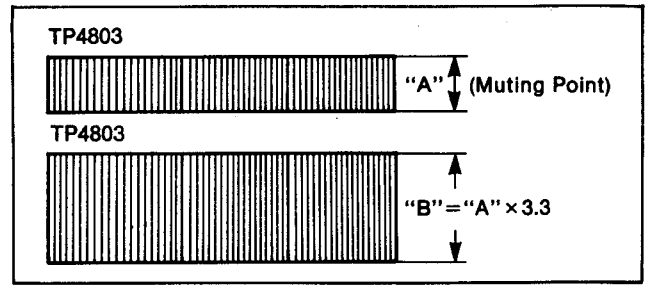

Figure E35

CIRCUIT BOARD LAYOUT

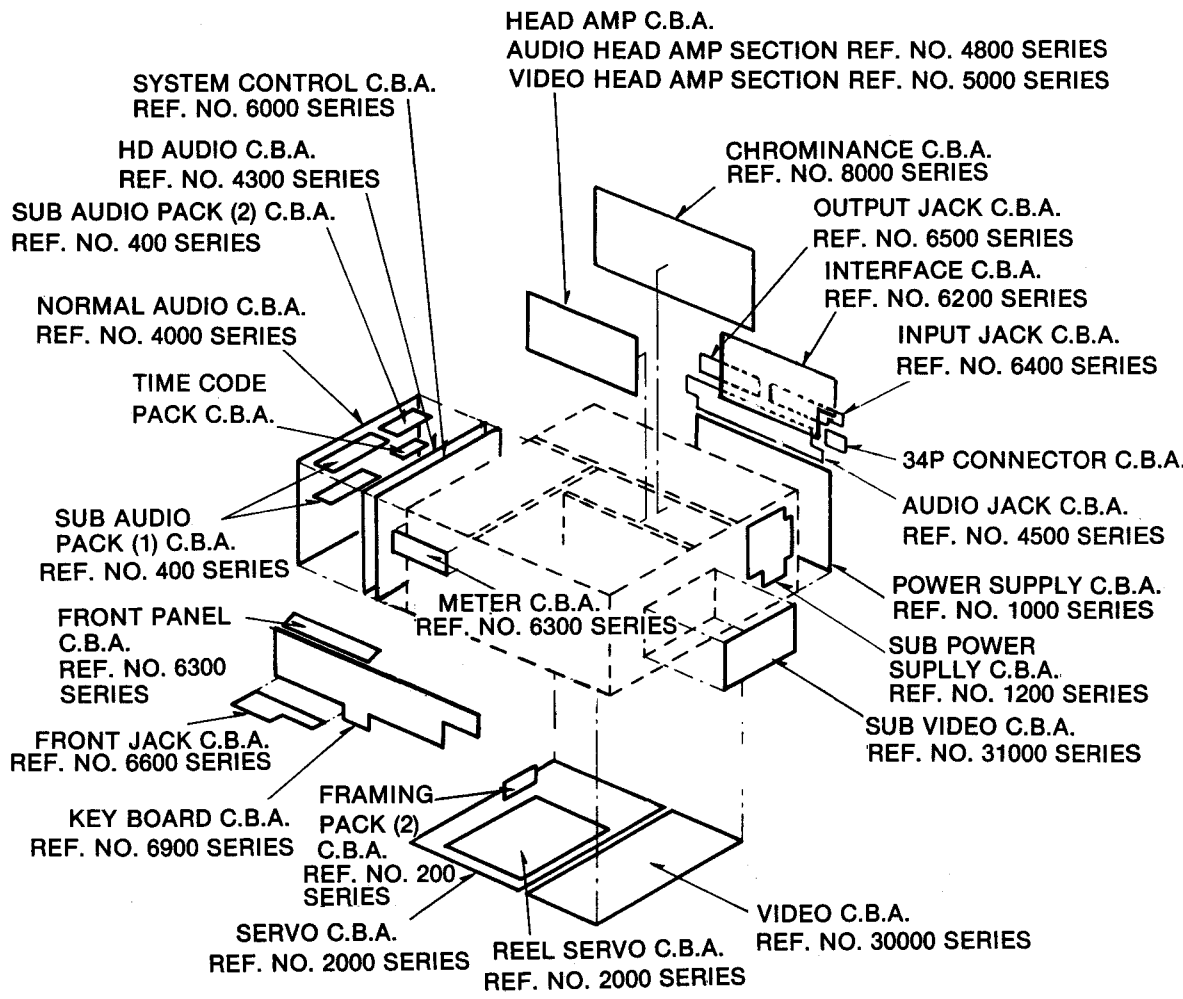

OVERALL BLOCK DIAGRAM

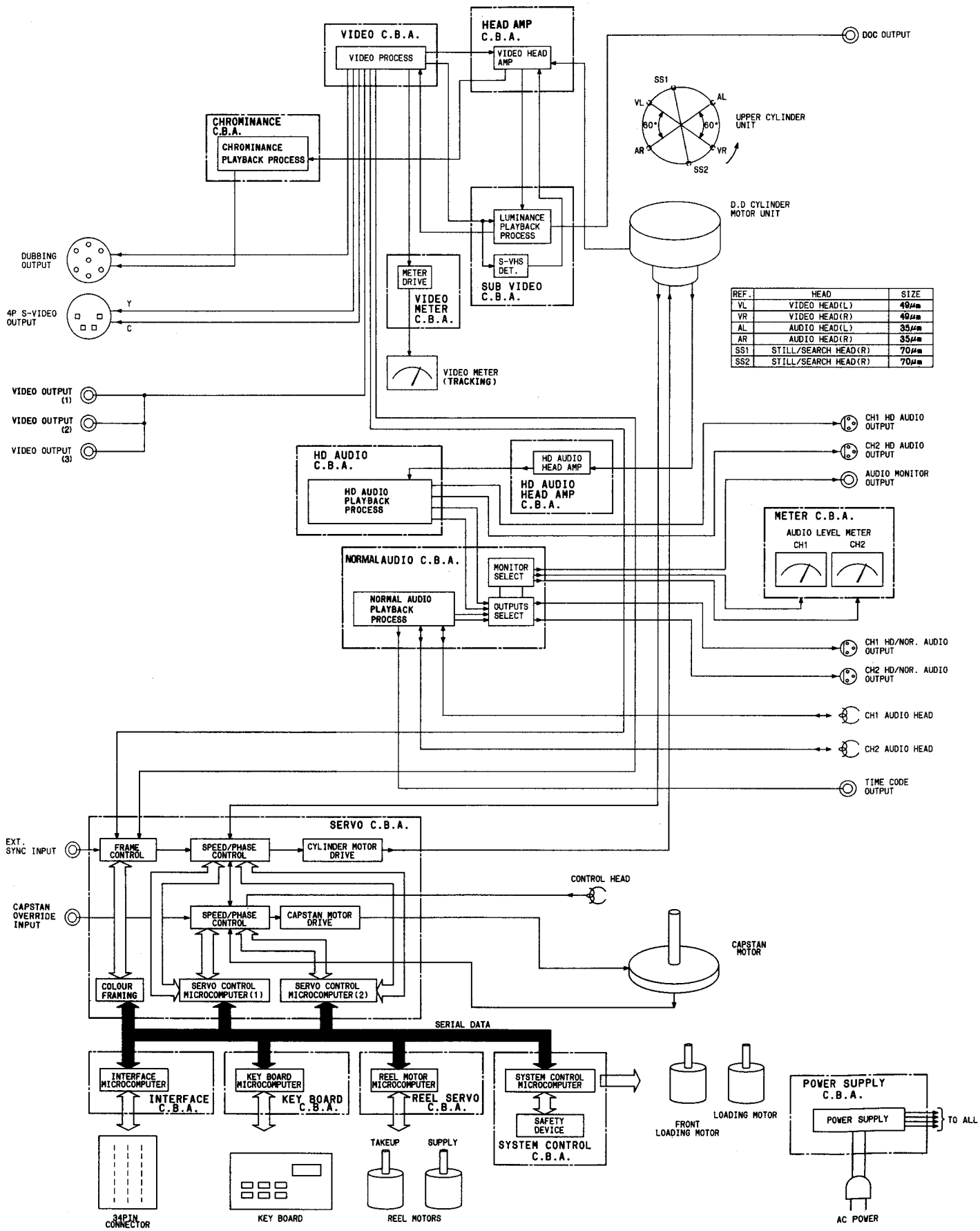

SYSTEM CONTROL BLOCK DIAGRAM

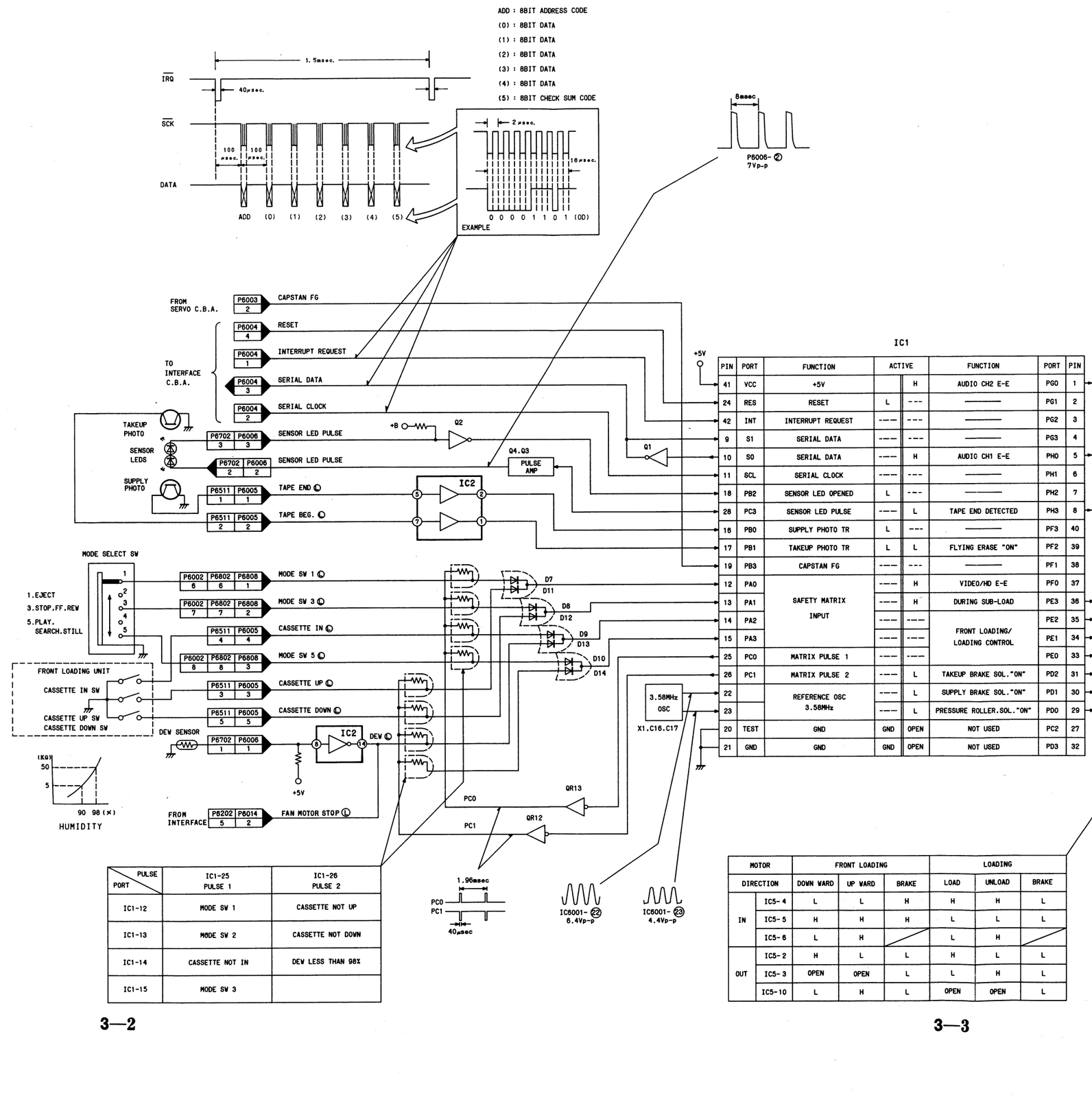

PULSE / PORT	IC1-25 PULSE 1	IC1-26 PULSE 2
IC1-12	MODE SW 1	CASSETTE NOT UP
IC1-13	MODE SW 2	CASSETTE NOT DOWN
IC1-14	CASSETTE NOT IN	DEW LESS THAN 98%
IC1-15	MODE SW 3	

MOTOR		FRONT LOADING			LOADING		
DIRECTION		DOWN WARD	UP WARD	BRAKE	LOAD	UNLOAD	BRAKE
IN	IC5-4	L	L	H	H	H	L
	IC5-5	H	H	H	L	L	L
	IC5-6	L	H		L	H	
OUT	IC5-2	H	L	L	H	L	L
	IC5-3	OPEN	OPEN	L	L	H	L
	IC5-10	L	H	L	OPEN	OPEN	L

ADD : 8BIT ADDRESS CODE
(0) : 8BIT DATA
(1) : 8BIT DATA
(2) : 8BIT DATA
(3) : 8BIT DATA
(4) : 8BIT DATA
(5) : 8BIT CHECK SUM CODE

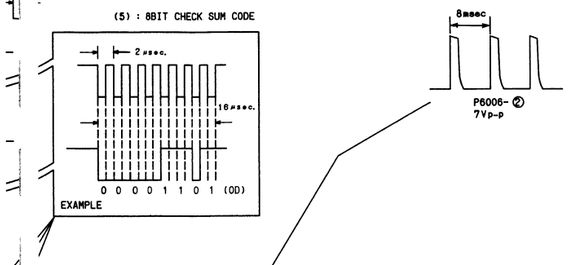

IC1

PIN	PORT	FUNCTION	ACTIVE		FUNCTION	PORT	PIN
41	VCC	+5V		H	AUDIO CH2 E-E	PG0	1
24	RES	RESET	L	---	———	PG1	2
42	INT	INTERRUPT REQUEST	---	---	———	PG2	3
9	SI	SERIAL DATA	---	---	———	PG3	4
10	SO	SERIAL DATA	---	H	AUDIO CH1 E-E	PH0	5
11	SCL	SERIAL CLOCK	---	---	———	PH1	6
18	PB2	SENSOR LED OPENED	L	---	———	PH2	7
28	PC3	SENSOR LED PULSE	---	L	TAPE END DETECTED	PH3	8
16	PB0	SUPPLY PHOTO TR	L	---	———	PF3	40
17	PB1	TAKEUP PHOTO TR	L	L	FLYING ERASE "ON"	PF2	39
19	PB3	CAPSTAN FG	---	---	———	PF1	38
12	PA0	SAFETY MATRIX INPUT	---	H	VIDEO/HD E-E	PF0	37
13	PA1		---	H	DURING SUB-LOAD	PE3	36
14	PA2		---	---	FRONT LOADING/ LOADING CONTROL	PE2	35
15	PA3		---	---		PE1	34
25	PC0	MATRIX PULSE 1	---	---		PE0	33
26	PC1	MATRIX PULSE 2	---	L	TAKEUP BRAKE SOL."ON"	PD2	31
22		REFERENCE OSC 3.58MHz	---	L	SUPPLY BRAKE SOL."ON"	PD1	30
23			---	L	PRESSURE ROLLER.SOL."ON"	PD0	29
20	TEST	GND	GND	OPEN	NOT USED	PC2	27
21	GND	GND	GND	OPEN	NOT USED	PD3	32

CH1 MUTE ④ → P6001 8
CH2 MUTE ④ → P6001 9
TAPE END ① → P6013 4 → TO REEL SERVO C.B.A.

+5V
Q2
Q4.Q3
PULSE AMP
Q1
IC2
D7 D11
D8 D12
D9 D13
D10 D14
3.58MHz OSC
X1.C16.C17
PC0
PC1
QR13
QR12
1.96msec
40μsec
IC6001-㉒ 6.4Vp-p
IC6001-㉓ 4.4Vp-p

MOTOR		FRONT LOADING			LOADING		
DIRECTION		DOWN WARD	UP WARD	BRAKE	LOAD	UNLOAD	BRAKE
IN	IC5-4	L	L	H	H	H	L
	IC5-5	H	H	H	L	L	L
	IC5-6	L	H		L	H	
OUT	IC5-2	H	L	L	H	L	L
	IC5-3	OPEN	OPEN	L	L	H	L
	IC5-10	L	H	L	OPEN	OPEN	L

Q17 ON/D SUB-LOAD
Q18 ON/D UNLOAD .LOAD
+12V
+15V FROM P6007-6
IC5
LOADING MOTOR
FRONT LOADING MOTOR
+20V +20V +20V
IC3
IC4
TAKEUP SOLENOID
SUPPLY SOLENOID
PRESSURE SOLENOID
TAKEUP SOL. "ON"
SUPPLY SOL. "ON"
PRESSURE SOL. "ON"
Q10 Q9 Q1.Q2 C10 D5
Q14 Q13 Q15.Q16 C11 D6
Q6 Q5 Q7.Q8 C9 D4

REF.NO.6000 SERIES

INTERFACE BLOCK DIAGRAM

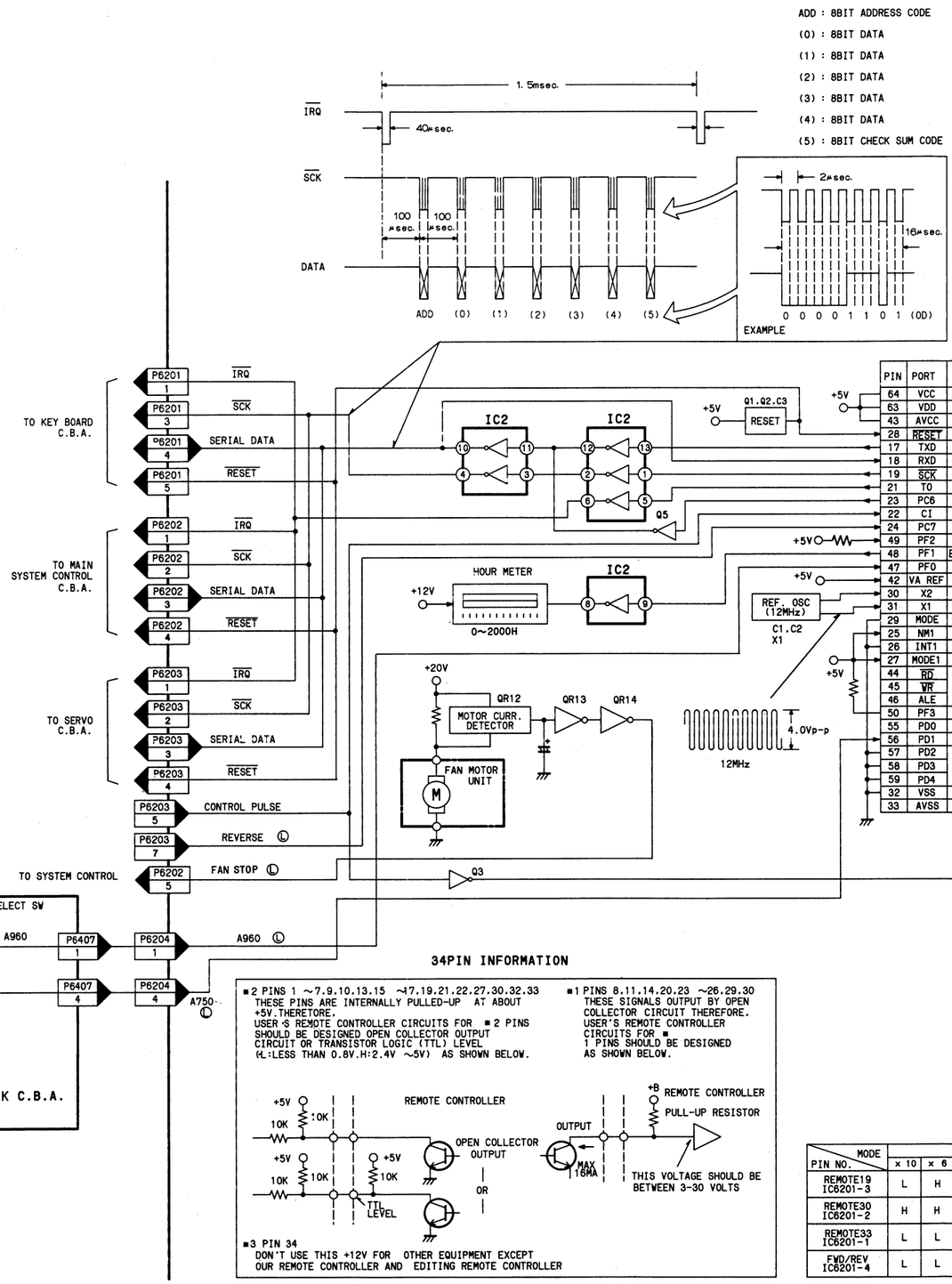

REMOTE SEARCH CONTROL SIGNALS

MODE / PIN NO.	REVERSE								FORWARD							
	× 10	× 6	× 2	× 1	× 1/2	× 1/5	× 1/10	× 1/25	× 1/25	× 1/10	× 1/5	× 1/2	× 1	× 2	× 6	× 10
REMOTE19 IC6201-3	L	H	L	H	L	H	L	H	H	L	H	L	H	L	H	L
REMOTE30 IC6201-2	H	H	H	H	L	L	L	L	L	L	L	L	H	H	H	H
REMOTE33 IC6201-1	L	L	H	H	H	H	L	L	L	L	H	H	H	H	L	L
FWD/REV IC6201-4	L	L	L	L	L	L	L	L	H	H	H	H	H	H	H	H

L: LOW. STATUS H: HIGH. STATUS

L.AGRAM

ADD : 8BIT ADDRESS CODE
(0) : 8BIT DATA
(1) : 8BIT DATA
(2) : 8BIT DATA
(3) : 8BIT DATA
(4) : 8BIT DATA
(5) : 8BIT CHECK SUM CODE

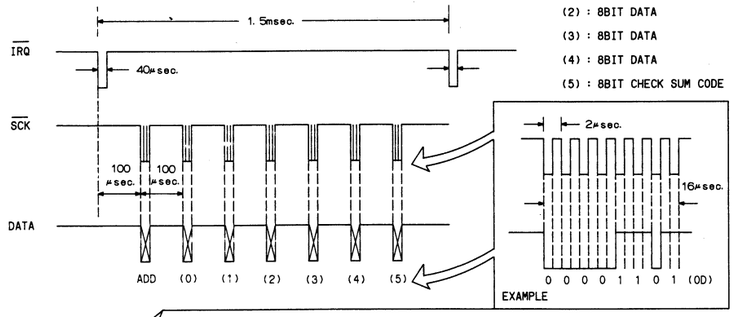

IC1

PIN	PORT	MODE/COMMAND	ACTIVE		MODE/COMMAND	PORT	PIN
64	VCC	+5V	5V	L	REC FROM REMOTE	AN6	40
63	VDD	+5V	5V	L	PLAY FROM REMOTE	AN3	37
43	AVCC	+5V	5V	L	FF FROM REMOTE	AN1	35
28	RESET	RESET	L	L	REW FROM REMOTE	AN2	36
17	TXD	SERIAL DATA OUT	—-	L	STOP FROM REMOTE	AN0	34
18	RXD	SERIAL DATA IN	—-	L	PAUSE FROM REMOTE	PA5	6
19	SCK	SERIAL CLOCK	—-	L	CASSETTE IN	PB0	9
21	TO	INTERRUPT REQUEST	—-	L	CUT IN MODE	AN5	39
23	PC6	SERIAL DATA CONTROL	—-	L	FWD PLAY FROM REMOTE	AN7	8
22	CI	CTL PULSE(30Hz)	⎍⎍	L	SERVO LOCK	PB1	10
24	PC7	REVERSE MODE	L	L	STEP FROM REMOTE	AN6	7
49	PF2	PAL MODEL	L	L	REVERSE MODE	PB2	11
48	PF1	EXCEPT STOP.EJECT MODE	H	L	CUT OUT FROM REMOTE	AN4	38
47	PF0	A960 POSITION	L	L	EDIT FROM REMOTE	AN7	41
42	VA REF	+5V	5V	L	REV FROM REMOTE	PA3	4
30	X2	12MHz REF. OSC	—-	—-	REMOTE ⑲	PA2	3
31	X1	12MHz REF. OSC	—-	L	START MARK	PA3	12
29	MODE	GND	GND	L	EJECT MODE	PA4	5
25	NM1	+5V	5V	L	INSERT AUDIO 1 MODE	PA6	15
26	INT1	GND	GND	L	REC MODE	PF4	51
27	MODE1	+5V	5V	L	PLAY MODE	PF5	52
44	RD	NOT USED	OPEN	L	FF MODE	PF6	53
45	WR		OPEN	L	REW MODE	PF7	54
46	ALE		OPEN	L	INSERT AUDIO 2 MODE	PB7	16
50	PF3	+5V	5V	L	PAUSE MODE	PB5	14
55	PD0	AUTO BACK SPACE ON	L	—-	REMOTE ㉚	PA1	2
56	PD1	A750 POSITION	L	L	CUT IN "ON"	PB4	13
57	PD2	NOT USED	GND	L	INSERT VIDEO MODE	PC3	20
58	PD3		GND	—-	REMOTE ㉝	PA0	1
59	PD4		GND	GND	NOT USED	PD7	62
32	VSS	GND	GND	GND		PD6	61
33	AVSS	GND	GND	GND		PD5	60

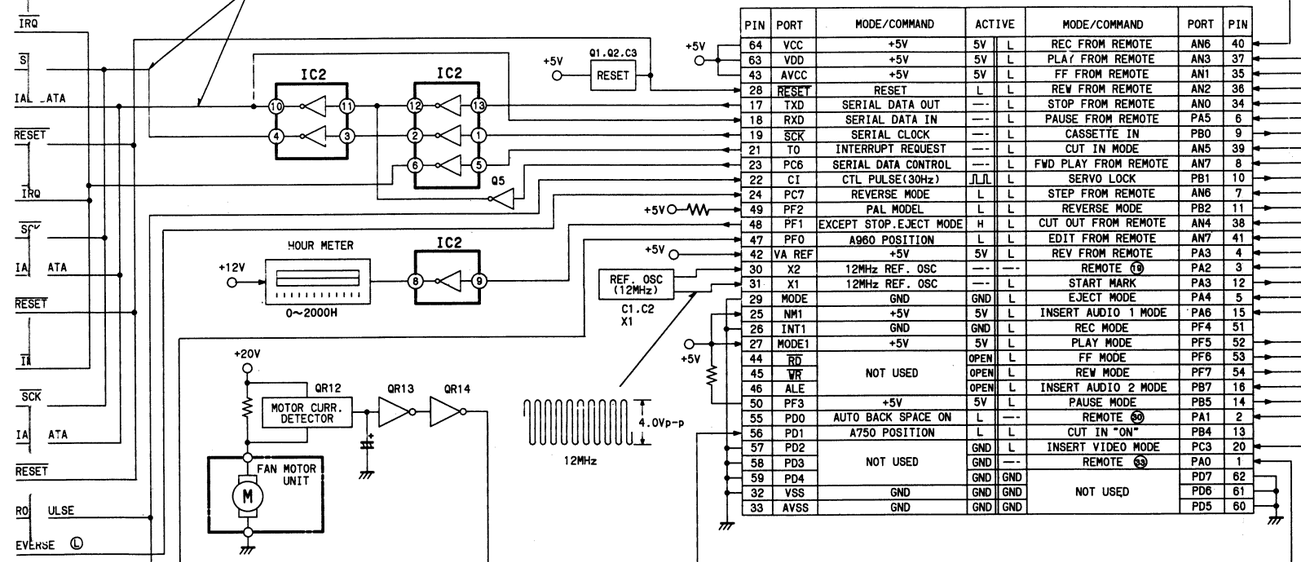

34PIN INFORMATION

■2 PINS 1 ~7.9.10.13.15 ~17.19.21.22.27.30.32.33
THESE PINS ARE INTERNALLY PULLED-UP AT ABOUT +5V.THERETORE.
USER'S REMOTE CONTROLLER CIRCUITS FOR ■2 PINS SHOULD BE DESIGNED OPEN COLLECTOR OUTPUT CIRCUIT OR TRANSISTOR LOGIC (TTL) LEVEL (L:LESS THAN 0.8V.H:2.4V ~5V) AS SHOWN BELOW.

■1 PINS 8.11.14.20.23 ~26.29.30
THESE SIGNALS OUTPUT BY OPEN COLLECTOR CIRCUIT THEREFORE. USER'S REMOTE CONTROLLER CIRCUITS FOR ■1 PINS SHOULD BE DESIGNED AS SHOWN BELOW.

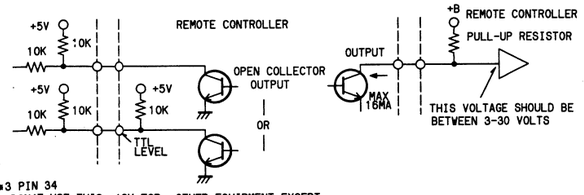

■3 PIN 34
DON'T USE THIS +12V FOR OTHER EQUIPMENT EXCEPT OUR REMOTE CONTROLLER AND EDITING REMOTE CONTROLLER

REMOTE SEARCH CONTROL SIGNALS

MODE / PIN NO.	REVERSE								FORWARD							
	× 10	× 6	× 2	× 1	×1/2	×1/5	×1/10	×1/25	×1/25	×1/10	×1/5	×1/2	× 1	× 2	× 6	× 10
REMOTE19 IC6201-3	L	H	L	H	L	H	L	H	H	L	H	L	H	L	H	L
REMOTE30 IC6201-2	H	H	H	H	L	L	L	L	L	L	L	L	H	H	H	H
REMOTE33 IC6201-1	L	L	H	H	H	H	L	L	L	L	H	H	H	H	L	L
FWD/REV IC6201-4	L	L	L	L	L	L	L	L	H	H	H	H	H	H	H	H

L: LOW. STATUS H: HIGH. STATUS

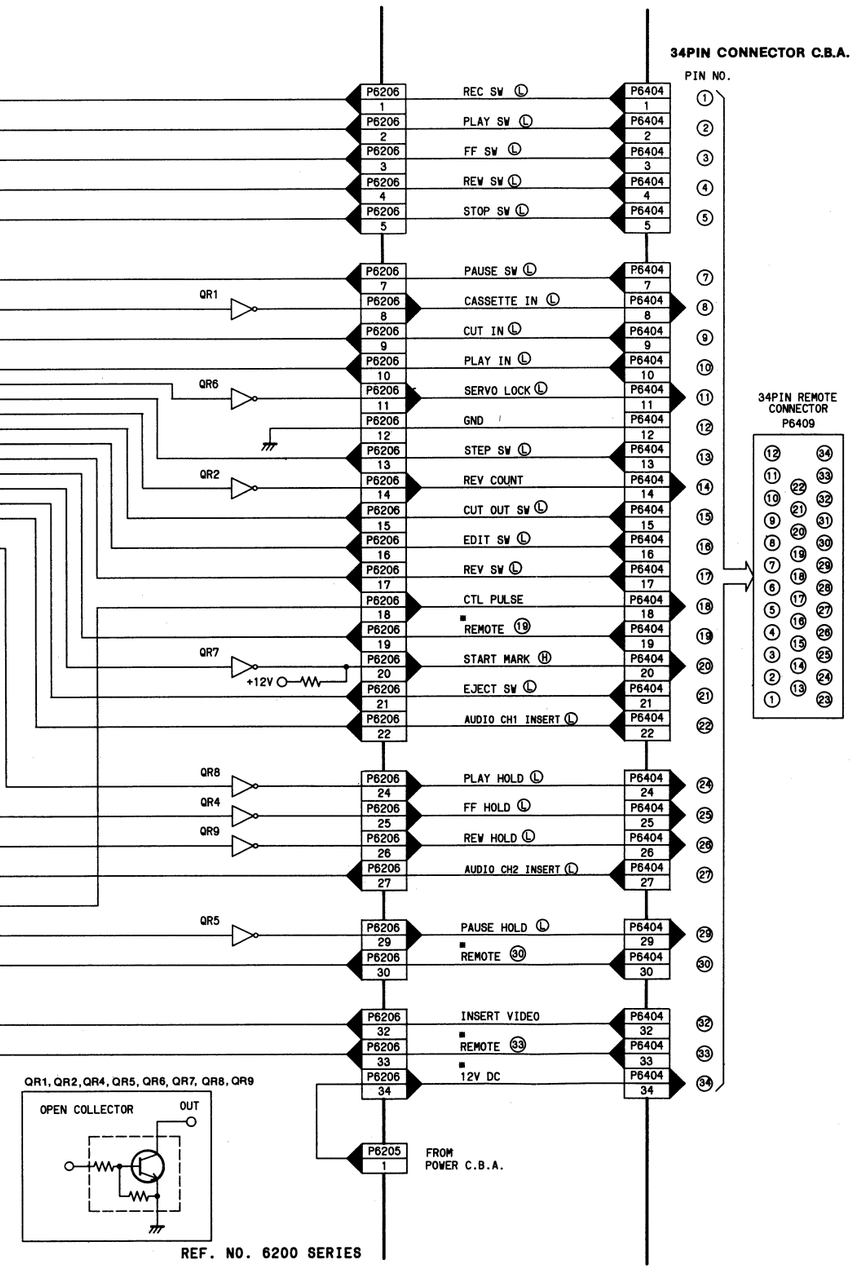

QR1, QR2, QR4, QR5, QR6, QR7, QR8, QR9

REF. NO. 6200 SERIES

KEY BOARD BLOCK DIAGRAM

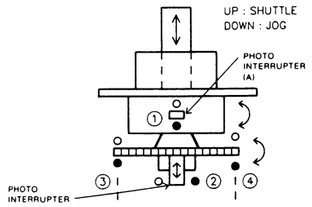

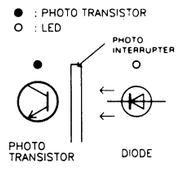

PULSE WIDTH AT PIN19 OF IC2	SPEED
MORE THAN 121msec.	×1/25 INTERMITTENT PULSE DRIVE
42msec.~120msec.	× 1/25
15msec.~41msec.	× 1/10
LESS THAN 14msec.	× 1/5

Jog Speed

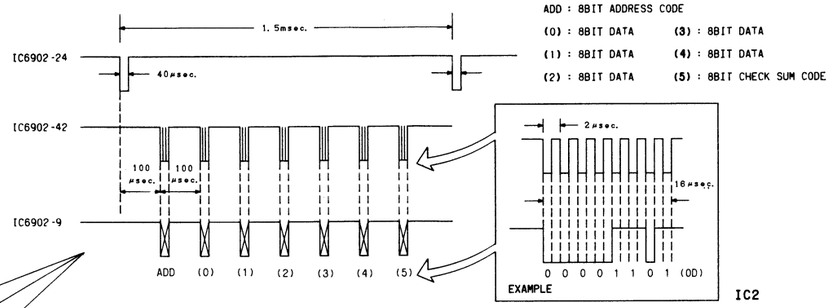

150KHz

TO INTERFACE C.B.A.

- P6901 1 — IRQ
- P6901 3 — SCK
- P6901 4 — SERIAL DATA
- P6901 5 — RESET

FROM SEARCH DIAL C.B.

- ① P6903 2 — STILL Ⓛ
- ② P6903 3 — SHUTTLE Ⓗ
- ③ P6903 4 — DIAL
- ④ P6903 5 — DIAL

IC6901

FWD+90° Ⓒ
REV-90° Ⓓ

SPEED	×1/25	×1/10	×1/5	×1/2	×1	×2	×5	×10
NUMBER OF PULSES	1ST	2ND	3RD	4TH	5TH	6TH	7TH	8TH

IC2

PIN	PORT	SIGNAL	SIGNAL		PORT	PIN
41	VCC	+5V	SEGMENT DATA	h	PG0	1
24	RST	RESET Ⓛ		g	PG1	2
42	INT	IRQ		f	PG2	3
9	SI	SERIAL DATA		e	PG3	4
10	SO	SERIAL DATA		d	PH0	5
11	SCK	SERIAL CLOCK		c	PH1	6
18	PB2	SEARCH DIAL DATA		b	PH2	7
19	PB3			a	PH3	8
12	PA0	SCAN DATA	KEY SCAN, GRID SCAN, LED SCAN		PF3	40
13	PA1				PF2	39
14	PA2				PF1	38
15	PA3				PF0	37
16	PB0				PE3	36
17	PB1				PE2	35
20	TEST	GND			PE1	34
21	GND	GND			PE0	33
22	X1	REFERENCE OSC 3.58MHz	NOT USED		PD3	32
23	X2				PD2	31
			LED DATA		PD1	30
					PD0	29
					PC3	28
					PC2	27
					PC1	26
					PC0	25

C6901

J1
RESET
"000"STOP
J2
J3

REW
PLAY
PAUSE
SEARCH
STOP
FF

X1.C3.C4
3.58MHz OSC

4.4Vp-p

OUT / IN	PE0 (33)	PE1 (34)	PE3 (36)	PF2 (39)	PF3 (40)
PA0 (12)	PAUSE	REW	—	SEARCH DIRECT Ⓗ	EJECT SW ON Ⓗ
PA1 (13)	SEARCH	PLAY	—	SERVO DETECT ON: Ⓗ	RESET Ⓗ
PA2 (14)	—	—	—	SHORT FF ON: Ⓗ	"000" STOP Ⓗ
PA3 (15)	—	—	—	AUTO REW ON Ⓗ	REMOTE Ⓛ
PB0 (16)	STOP	—	STILL Ⓛ	TC Ⓛ	—
PB1 (17)	FF	—	SHUTTLE Ⓗ	DOLBY Ⓛ	EXT Ⓛ

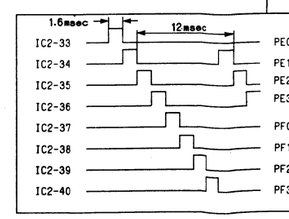

EJECT SW ON Ⓗ

SW6926
LOCAL — REMOTE — REMOTE Ⓛ
CONTROL

FROM INPUT JACK C.B.A.
POCKET SW NOR EXT
SYNC
TO NORMAL AUDIO C.B.A.

- P6906 5 — EXT SYNC Ⓛ
- P6907 6 — DOLBY IN Ⓛ
- FROM POCKET SW C.B.A
- P6906 1
- NORMAL AUDIO C.B.A. — P6907 8 — TC ON Ⓛ

- P6904 1 — D6971
- P6904 2 — D6972
- P6904 3 — SW6971 — EJECT SW
- P6904 4 — D6973
- P6904 5 — D6974

EJECT C.B.A.

JUMPER INFORMATION

J1 (DIRECT SEARCH)	OPEN	WHEN THE SEARCH DIAL IS ROTATED DURING THE STOP MODE.THE DECK GOES TO SEARCH MODE.
	CONNECT	THE DIRECT SEARCH IS NOT OPERATED.
J2 (SHORT FF)	CONNECT	THE UNIT WILL WIND THE TAPE SHORTLY.WHEN THE TAPE BEGINNING IS DETECTED.
	OPEN	THE UNIT WILL STOP.WHEN THE TAPE BEGINNING IS DETECTED.
J3 (AUTO REW)	CONNECT	THE UNIT WILL REWIND THE TAPE TO THE TAPE BEGINNING WHEN THE TAPE END IS DETECTED.
	OPEN	THE UNIT WILL STOP.WHEN THE TAPE END IS DETECTED.

FACTORY STANDARD

PF3 PF2 PE3 PE1 PE0

ADD : 8BIT ADDRESS CODE
(0) : 8BIT DATA (3) : 8BIT DATA
(1) : 8BIT DATA (4) : 8BIT DATA
(2) : 8BIT DATA (5) : 8BIT CHECK SUM CODE

IC2

PIN	PORT	SIGNAL	SIGNAL		PORT	PIN
41	VCC	+5V	SEGMENT DATA	h	PG0	1
24	RST	RESET Ⓛ		g	PG1	2
42	INT	IRQ		f	PG2	3
9	SI	SERIAL DATA		e	PG3	4
10	SO	SERIAL DATA		d	PH0	5
11	SCK	SERIAL CLOCK		c	PH1	6
18	PB2	SEARCH DIAL DATA		b	PH2	7
19	PB3			a	PH3	8
12	PA0	SCAN DATA	KEY SCAN. GRID SCAN. LED SCAN		PF3	40
13	PA1				PF2	39
14	PA2				PF1	38
15	PA3				PF0	37
16	PB0				PE3	36
17	PB1				PE2	35
20	TEST	GND			PE1	34
21	GND	GND			PE0	33
22	X1	REFERENCE OSC 3.58MHz	NOT USED		PD3	32
23	X2				PD2	31
			LED DATA		PD1	30
					PD0	29
					PC3	28
					PC2	27
					PC1	26
					PC0	25

IN \ OUT	PE0 (33)	PE1 (34)	PE3 (36)	PF2 (39)	PF3 (40)
PA0 (12)	PAUSE	REW	—	SEARCH DIRECT Ⓗ	EJECT SW ON Ⓗ
PA1 (13)	SEARCH	PLAY	—	SERVO DETECT ON: Ⓗ	RESET Ⓗ
PA2 (14)	—	—	—	SHORT FF ON: Ⓗ	"000" STOP Ⓗ
PA3 (15)	—	—	—	AUTO REW ON Ⓗ	REMOTE Ⓛ
PB0 (16)	STOP	—	STILL Ⓛ	TC Ⓛ	—
PB1 (17)	FF	—	SHUTTLE Ⓗ	DOLBY Ⓛ	EXT Ⓛ

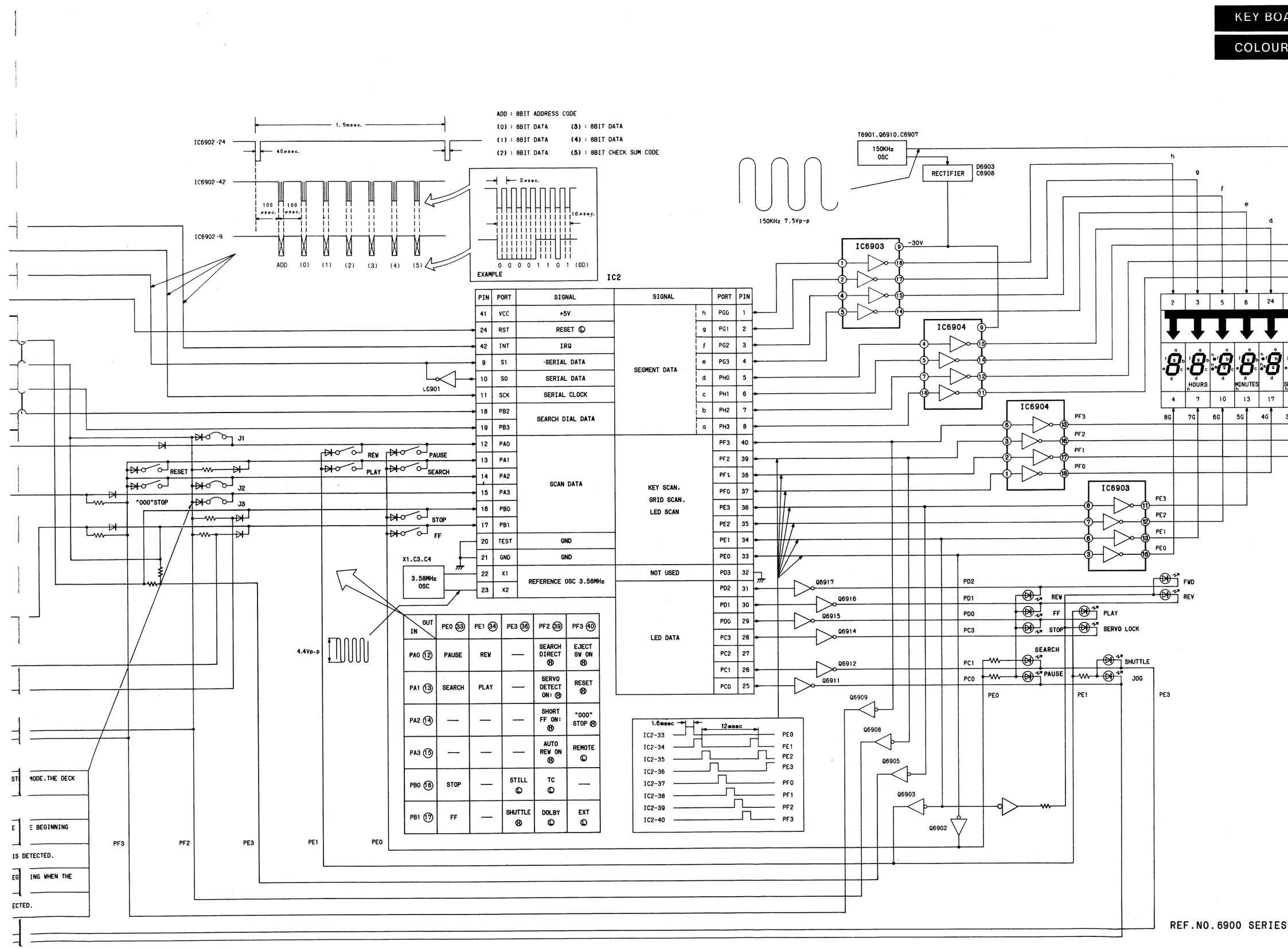

REF.NO.6900 SERIES

COLOUR FRAMING BLOCK DIAGRAM

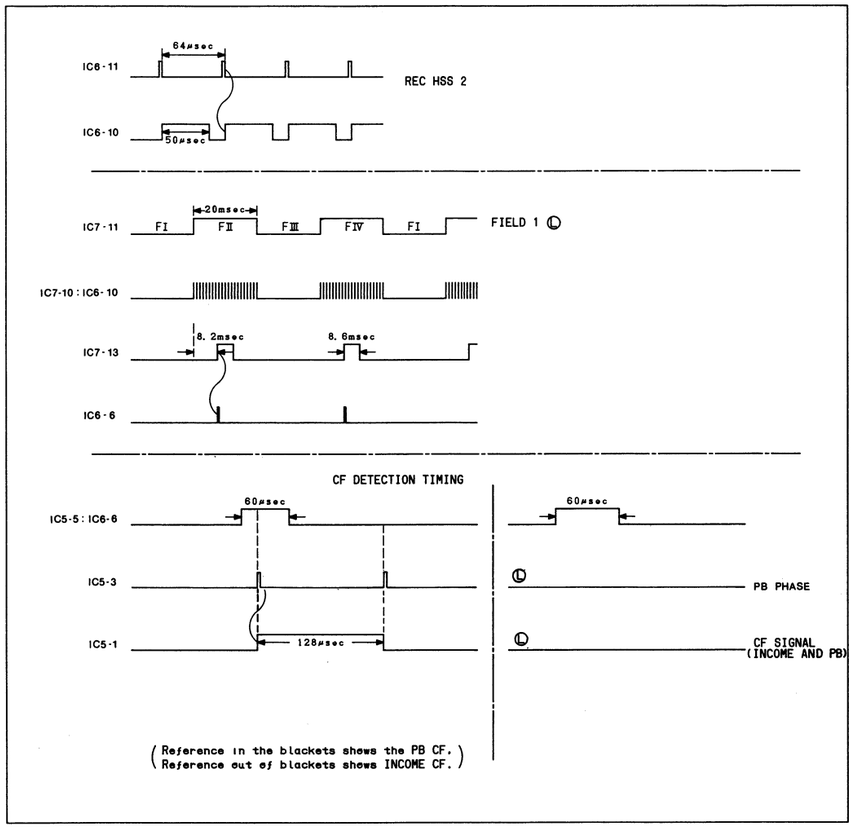

REF.NO.2500 SERIES
REF.NO.2600 SERIES

IC8(μPD1511AC108)

PIN NO.	NAME	I/O	FUNCTION	ACTIVE	ACTIVE	FUNCTION	I/O	NAME	PIN NO.
23	X2	I	MICROCOMPUTER CLOCK SIGNAL	3.58 MHz	+5V	VCC	I	VCC	41
22	X1	I			L	RESET	I	RESET	24
					L	INTERRUPT.REQUEST	I	INT	42
					—	SERIAL CLOCK	I	SCK	11
					—	SERIAL DATA	I	SI	9
					H	SS H SW	O	PC2	27

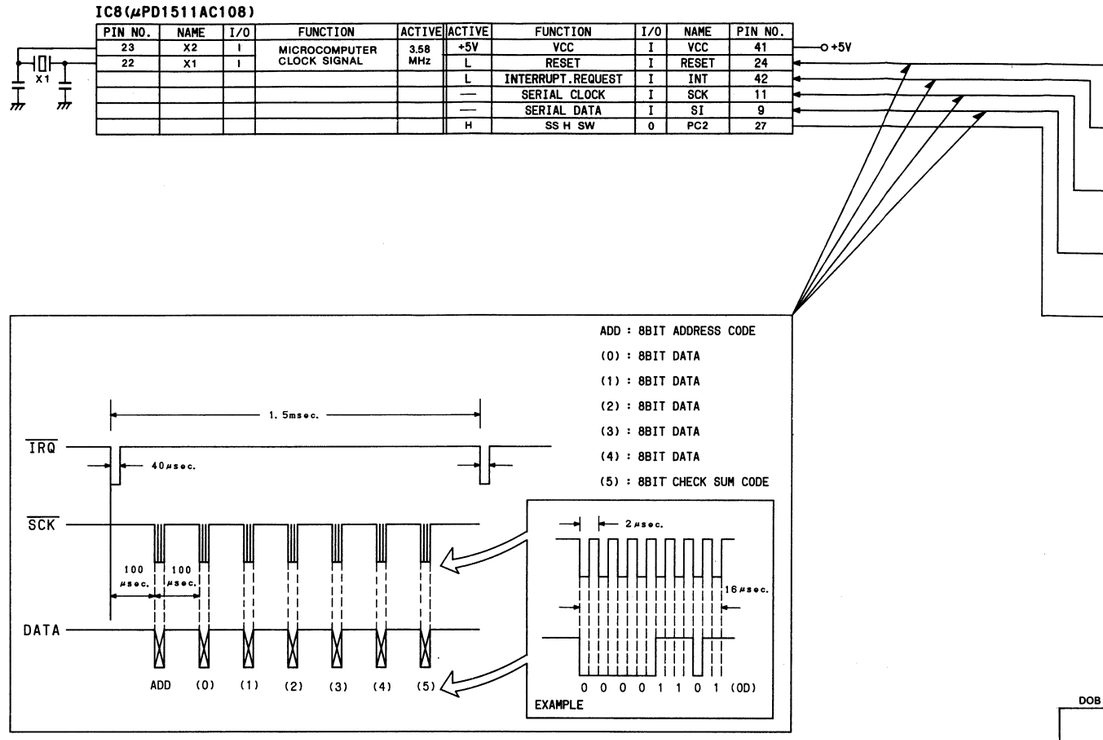

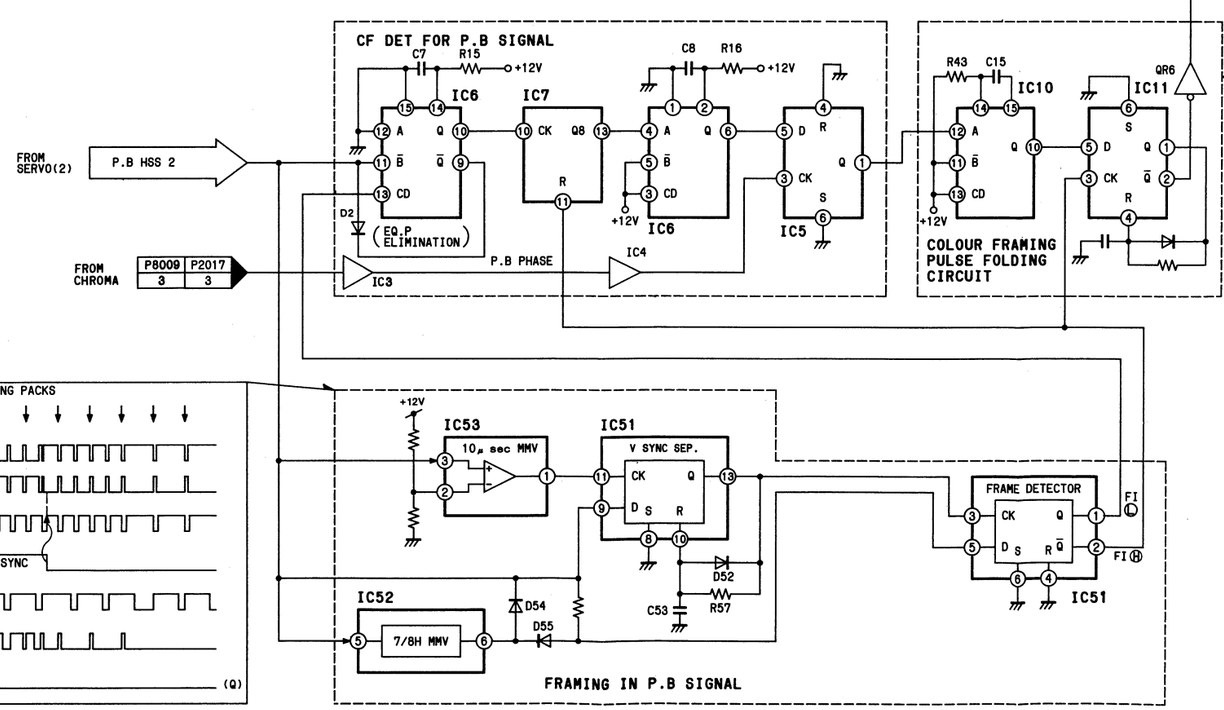

IC8(μPD1511AC108)

PIN NO.	NAME	I/O	FUNCTION	ACTIVE	ACTIVE	FUNCTION	I/O	NAME	PIN NO.
23	X2	I	MICROCOMPUTER CLOCK SIGNAL	3.58 MHz	+5V	VCC	I	VCC	41
22	X1	I			L	RESET	I	RESET	24
					L	INTERRUPT.REQUEST	I	INT	42
					—	SERIAL CLOCK	I	SCK	11
					—	SERIAL DATA	I	SI	9
					H	SS H SW	O	PC2	27

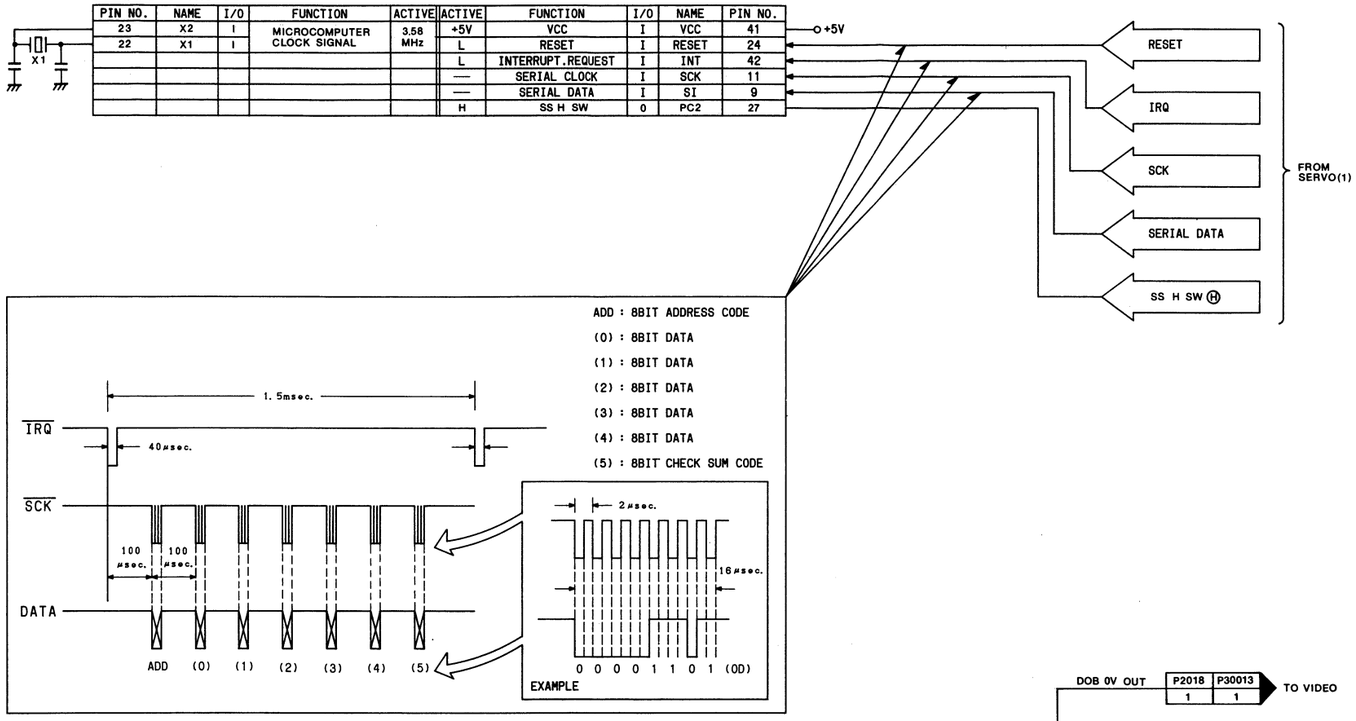

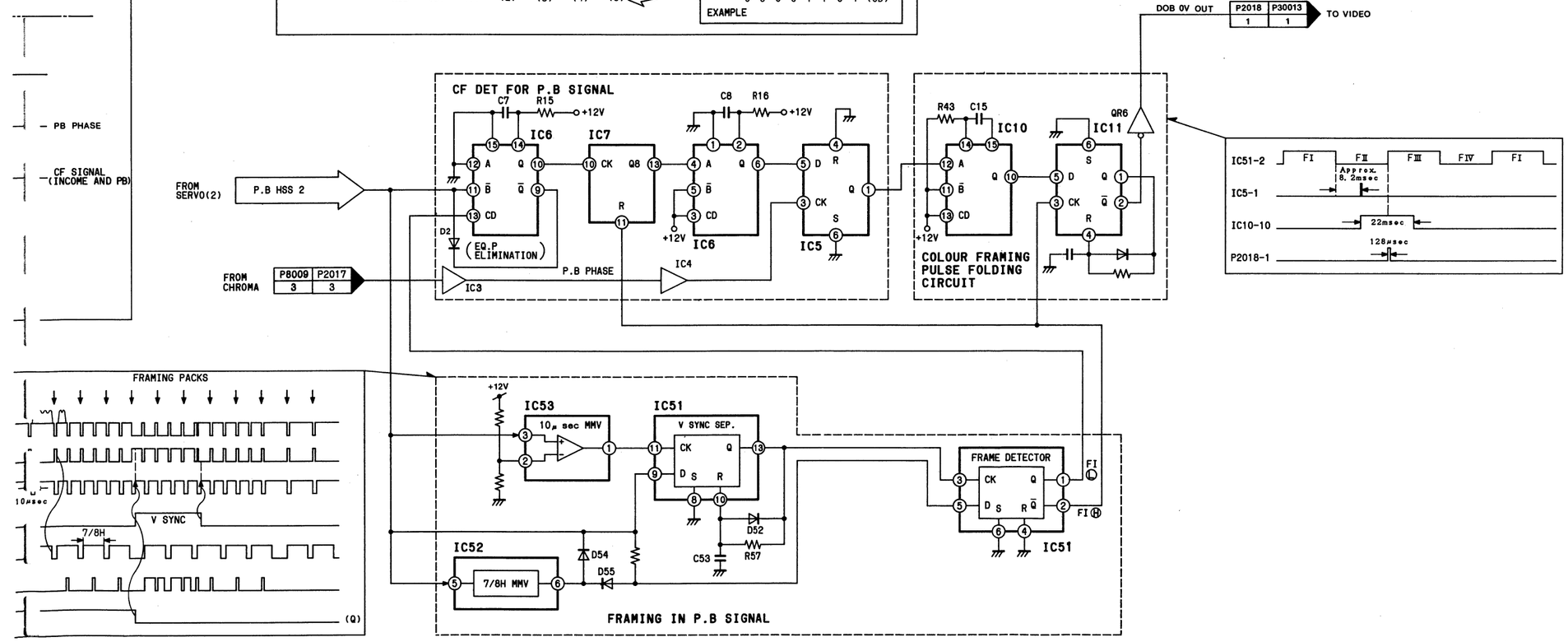

SERVO (2) BLOCK DIAGRAM

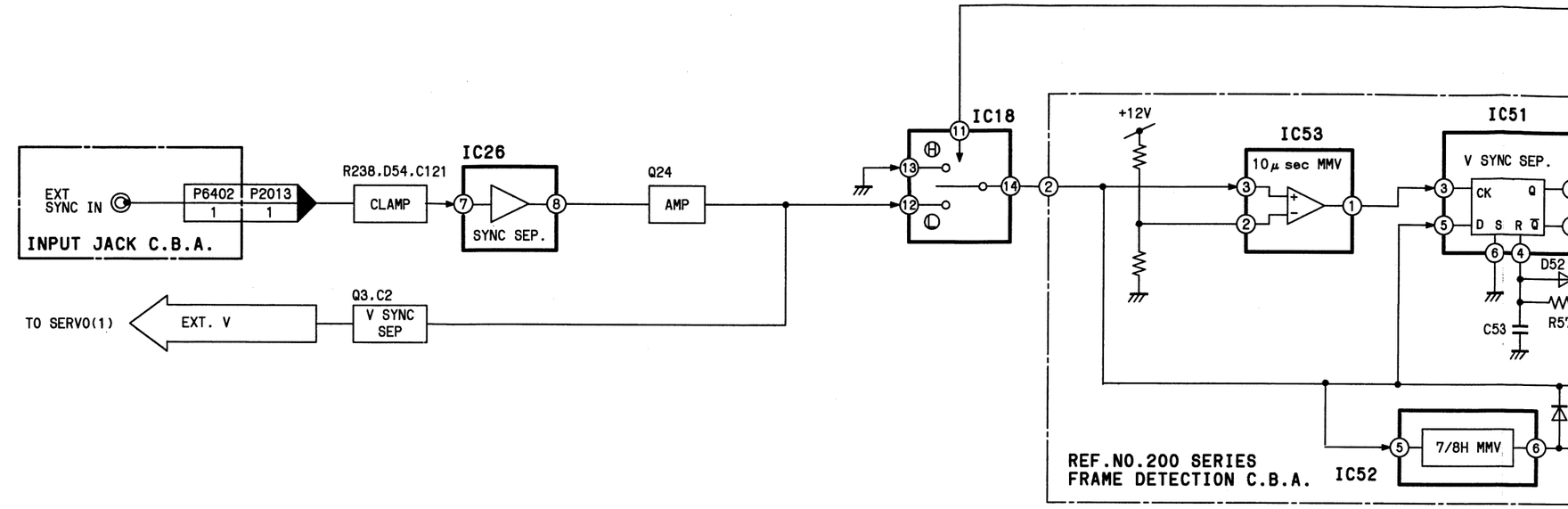

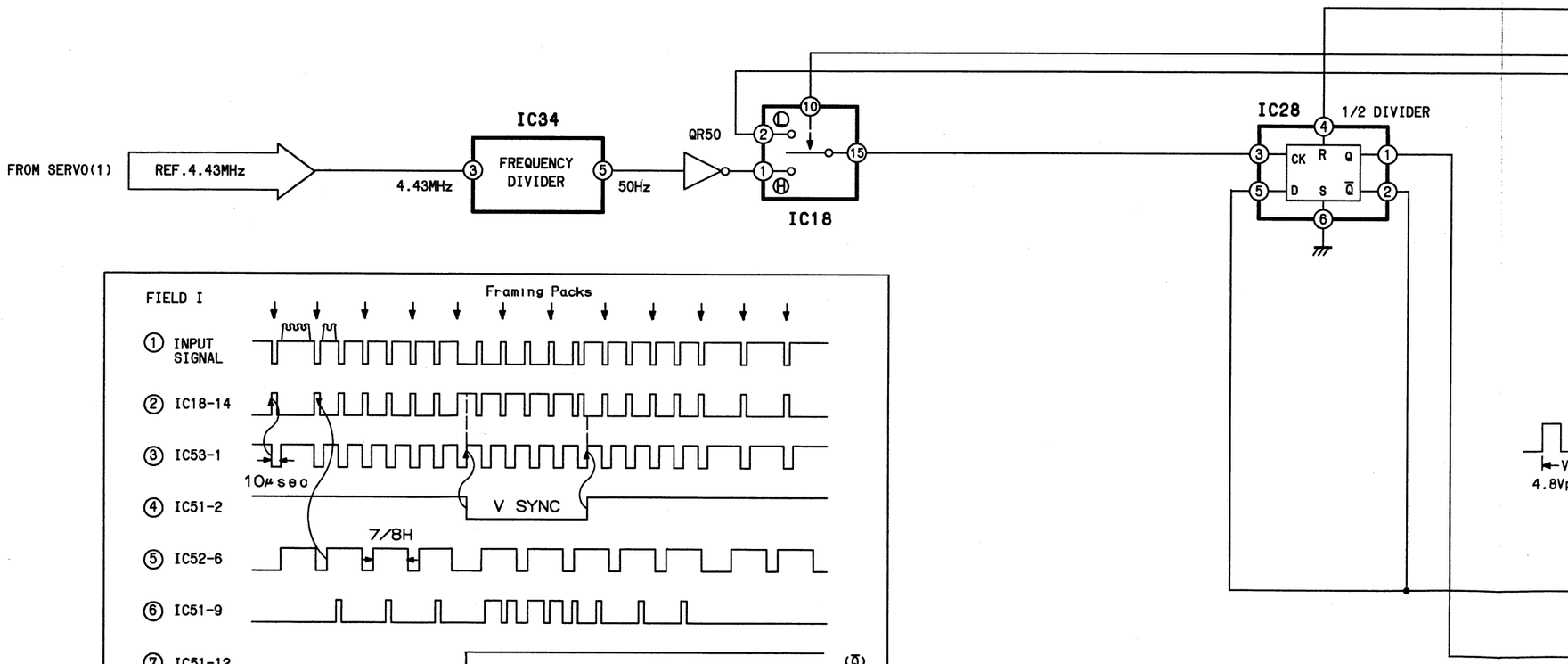

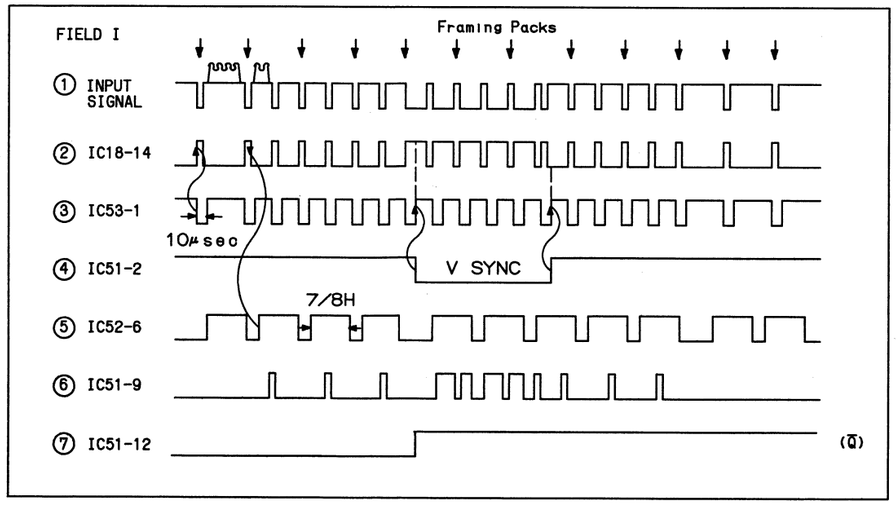

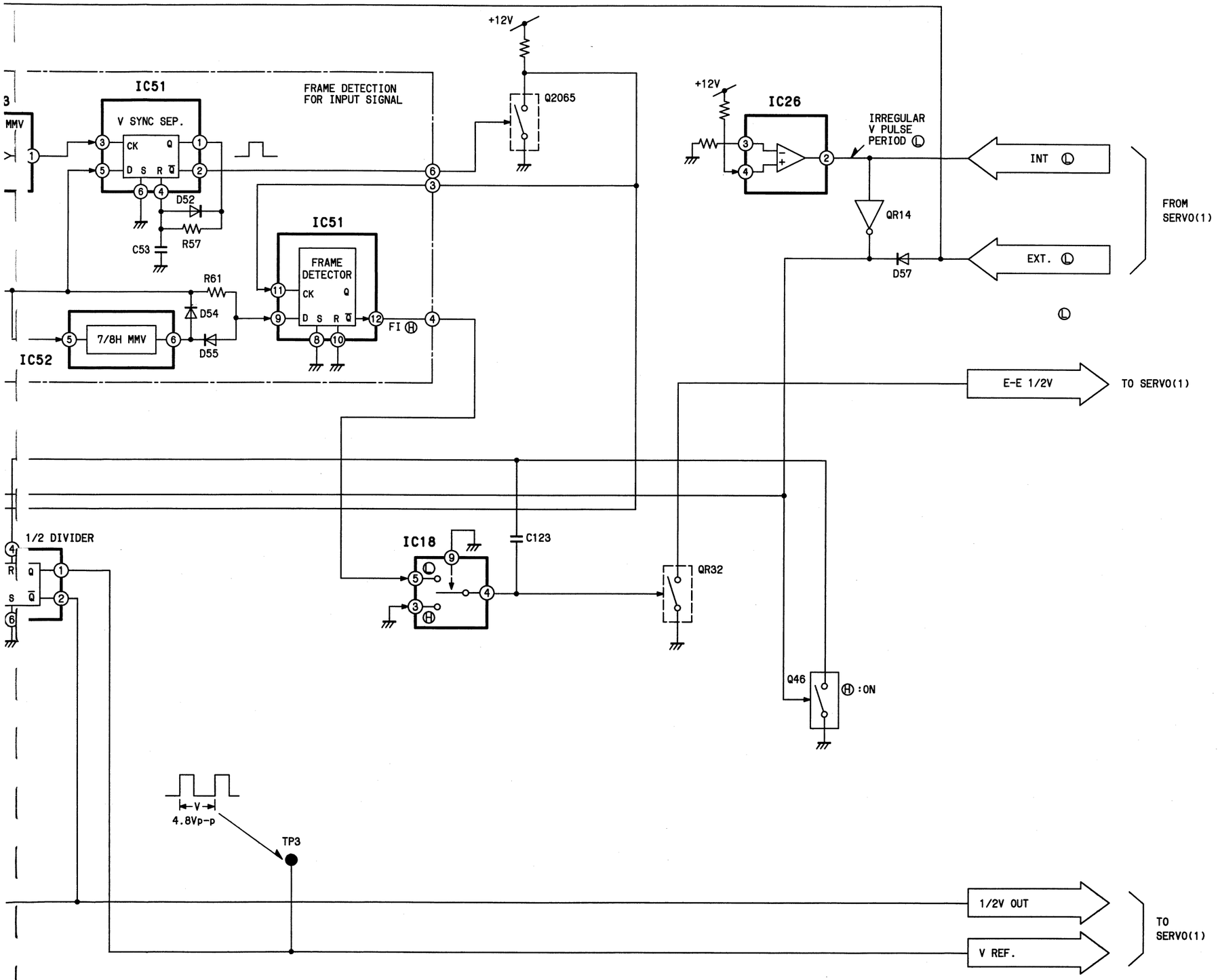
+12V
IC51
FRAME DETECTION
FOR INPUT SIGNAL
V SYNC SEP.
CK
Q
D
S
R
Q̄
Q2065
D52
R57
C53
IC51
FRAME
DETECTOR
R61
D54
D55
7/8H MMV
IC52
FI Ⓗ
+12V
IC26
IRREGULAR
V PULSE
PERIOD Ⓛ
INT Ⓛ
QR14
D57
EXT. Ⓛ
FROM
SERVO(1)
Ⓛ
E-E 1/2V
TO SERVO(1)
1/2 DIVIDER
IC18
C123
QR32
Q46
Ⓗ :ON
V
4.8Vp-p
TP3
1/2V OUT
V REF.
TO
SERVO(1)

SERVO (1) BLOCK DIAGRAM

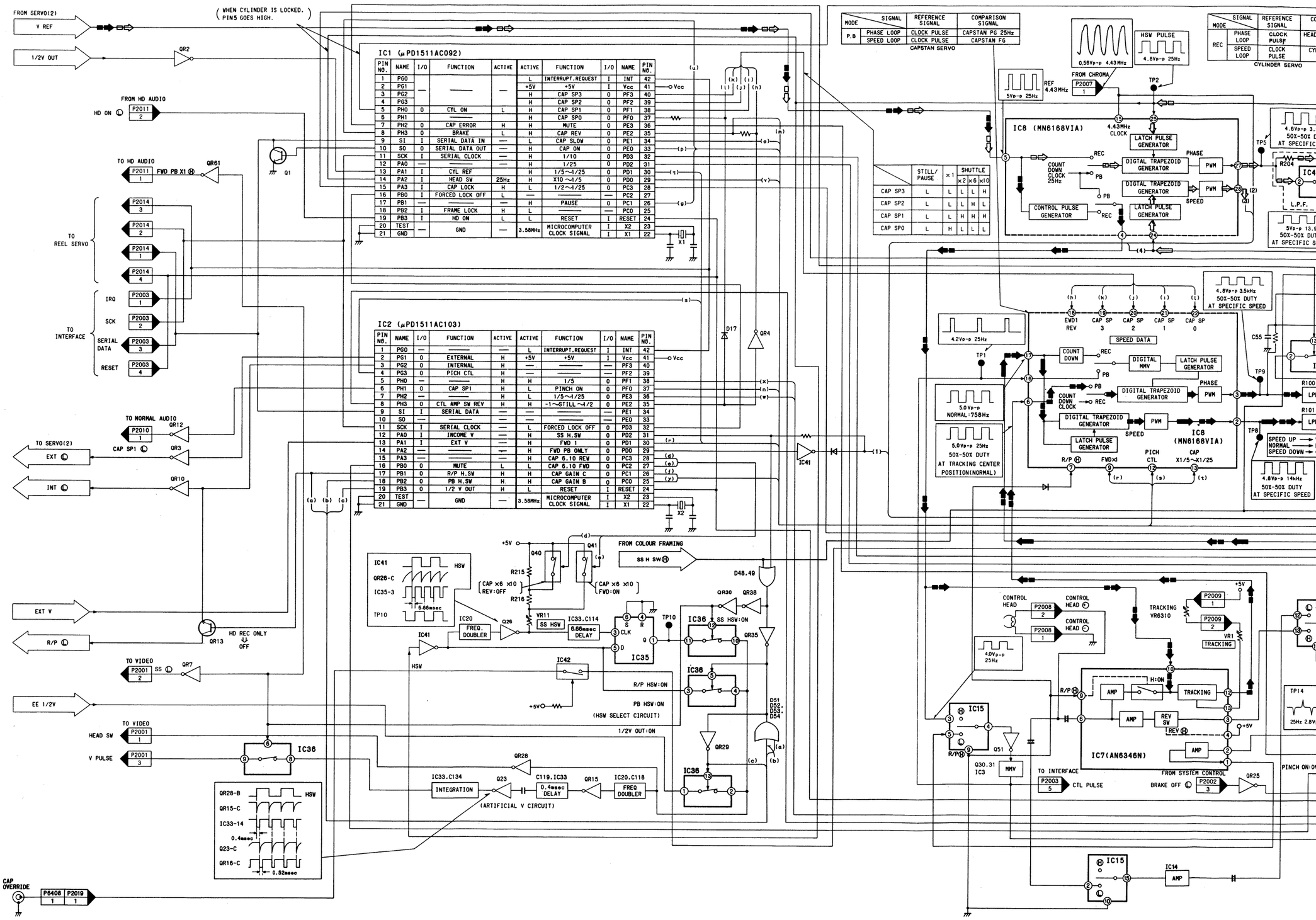

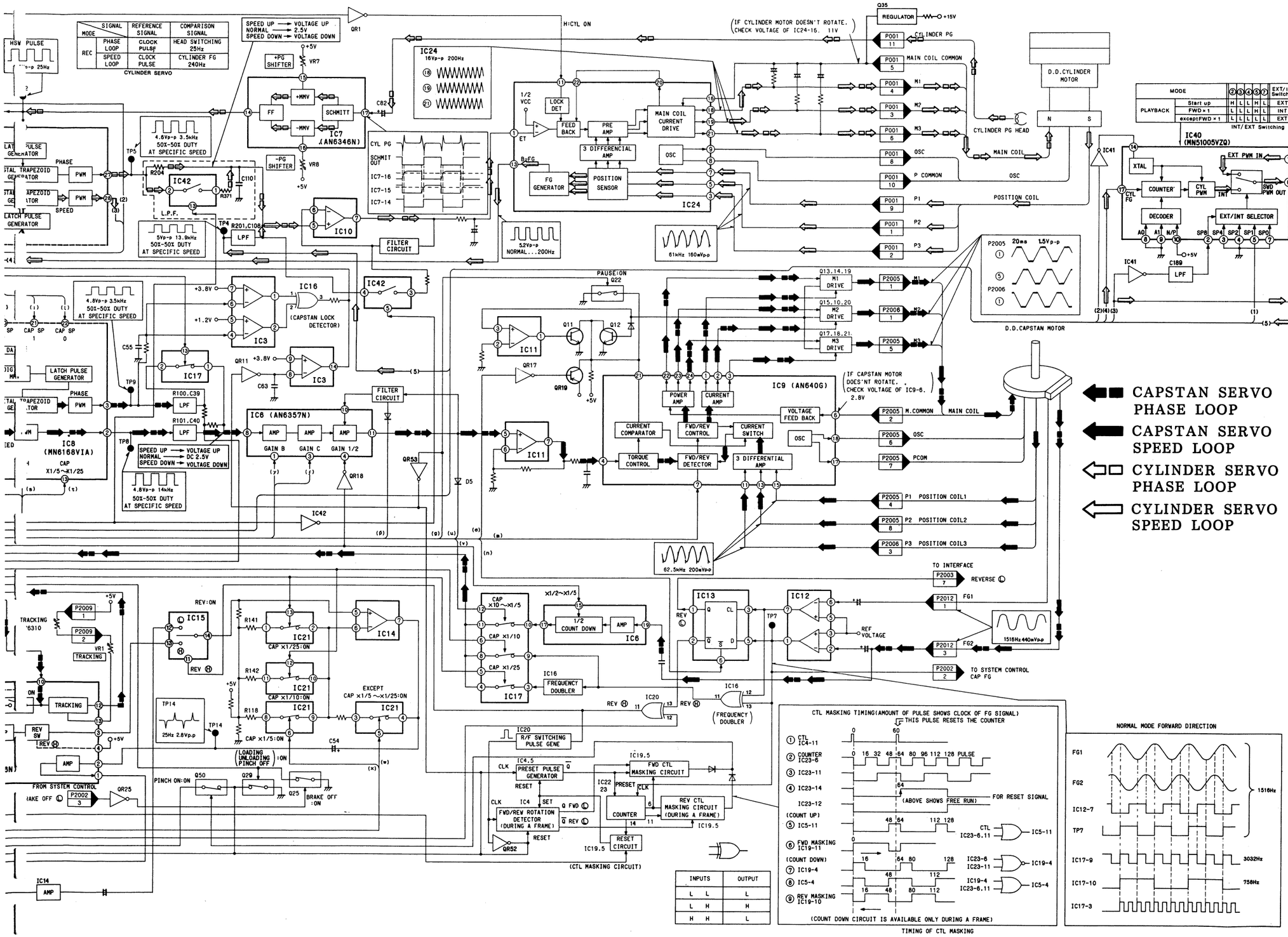
CYLINDER SERVO
SIGNAL
REFERENCE SIGNAL
COMPARISON SIGNAL
REC
PHASE LOOP
CLOCK PULSE 25Hz
HEAD SWITCHING 25Hz
SPEED LOOP
CLOCK PULSE
CYLINDER FG 240Hz
SPEED UP → VOLTAGE UP
NORMAL → 2.5V
SPEED DOWN → VOLTAGE DOWN
H:CYL ON
(IF CYLINDER MOTOR DOESN'T ROTATE. CHECK VOLTAGE OF IC24-16. 11V)
REGULATOR +15V
CYLINDER PG
MAIN COIL COMMON
M1
M2
M3
OSC
P COMMON
P1
P2
P3
D.D.CYLINDER MOTOR
CYLINDER PG HEAD
MAIN COIL
POSITION COIL
IC24
16Vp-p 200Hz
IC7 (AN6346N)
+PG SHIFTER
-PG SHIFTER
VR7
VR8
FF
SCHMITT
+MMV
-MMV
CYL PG
SCHMIT OUT
IC7-16
IC7-15
IC7-14
4.8Vp-p 3.5kHz 50%-50% DUTY AT SPECIFIC SPEED
5Vp-p 13.9kHz 50%-50% DUTY AT SPECIFIC SPEED
L.P.F.
LPF
FILTER CIRCUIT
IC10
R204
C110
R371
R201,C108
IC42
1/2 VCC
LOCK DET
FEED BACK
PRE AMP
MAIN COIL CURRENT DRIVE
3 DIFFERENCIAL AMP
FG GENERATOR
POSITION SENSOR
B-FG
52Vp-p NORMAL...200Hz
61kHz 160mVp-p
PAUSE:ON
Q22
IC11
Q11
Q12
QR17
QR19
+5V
Q13,14,19 M1 DRIVE
Q15,10,20 M2 DRIVE
Q17,18,21 M3 DRIVE
IC9 (AN640G)
POWER AMP
CURRENT AMP
VOLTAGE FEED BACK
CURRENT COMPARATOR
FWD/REV CONTROL
CURRENT SWITCH
OSC
TORQUE CONTROL
FWD/REV DETECTOR
3 DIFFERENTIAL AMP
IF CAPSTAN MOTOR DOES'NT ROTATE. CHECK VOLTAGE OF IC9-6. 2.8V
M.COMMON
MAIN COIL
P POSITION COIL1
P POSITION COIL2
P POSITION COIL3
62.5kHz 200mVp-p
D.D.CAPSTAN MOTOR
P2005 20ms 1.5Vp-p
P2006
IC41
XTAL
COUNTER
CYL PWM
EXT PWM IN
SWD PWM OUT
CYL FG
INT
DECODER
EXT/INT SELECTOR
A0 A1 N/P SP3 SP2 SP1 SP0
C109
LPF
MODE
PLAYBACK
Start up
FWD×1
exceptFWD×1
EXT/INT Switching
INT/EXT Switching
IC40 (MN51005VZQ)
IC3
IC16
(CAPSTAN LOCK DETECTOR)
IC17
IC6 (AN6357N)
AMP
GAIN B
GAIN C
GAIN 1/2
IC8 (MN6168VIA)
CAP X1/5~X1/25
SPEED UP → VOLTAGE UP
NORMAL → DC 2.5V
SPEED DOWN → VOLTAGE DOWN
4.8Vp-p 14kHz 50%-50% DUTY AT SPECIFIC SPEED
R100,C39
R101,C40
C55
C63
QR11
QR18
QR53
D5
LATCH PULSE GENERATOR
TRAPEZOID
PHASE
PWM
SPEED
CAP SP
TP5
TP4
TP8
TP9
IC42
(p) (g) (u) (v) (e) (m) (n)
TRACKING
P2009 1
P2009 2
VR1
REV:ON
IC15
IC14
IC21
R141
R142
R118
CAP ×1/25:ON
CAP ×1/10:ON
CAP ×1/5:ON
EXCEPT CAP ×1/5~×1/25:ON
TP14
25Hz 2.8Vp-p
C54
REV SW
REV
AMP
FROM SYSTEM CONTROL
BRAKE OFF
P2002 3
QR25
PINCH ON:ON
Q50
Q29
Q25
(LOADING UNLOADING PINCH OFF) :ON
BRAKE OFF :ON
IC14
AMP
CAP ×10~×1/5
CAP ×1/10
CAP ×1/25
IC17
1/2 COUNT DOWN
AMP
IC6
IC16
FREQUENCY DOUBLER
IC20
R/F SWITCHING PULSE GENE
IC4.5
PRESET PULSE GENERATOR
RESET
IC19.5
FWD CTL MASKING CIRCUIT
REV CTL MASKING CIRCUIT (DURING A FRAME)
FWD/REV ROTATION DETECTOR (DURING A FRAME)
COUNTER
RESET CIRCUIT
QR52
Q FWD
Q REV
(CTL MASKING CIRCUIT)
INPUTS
OUTPUT
L L L
L H H
H H L
IC13
IC12
REV
TP7
REF VOLTAGE
1516Hz 440mVp-p
TO INTERFACE
REVERSE
FG1
FG2
TO SYSTEM CONTROL
CAP FG
CTL MASKING TIMING(AMOUNT OF PULSE SHOWS CLOCK OF FG SIGNAL)
THIS PULSE RESETS THE COUNTER
CTL IC4-11
COUNTER IC23-6
IC23-11
IC23-14
IC23-12
(COUNT UP)
IC5-11
FWD MASKING IC19-11
(COUNT DOWN)
IC19-4
IC5-4
REV MASKING IC19-10
(ABOVE SHOWS FREE RUN)
FOR RESET SIGNAL
(COUNT DOWN CIRCUIT IS AVAILABLE ONLY DURING A FRAME)
TIMING OF CTL MASKING
NORMAL MODE FORWARD DIRECTION
1516Hz
3032Hz
758Hz
IC12-7
IC17-9
IC17-10
IC17-3
CAPSTAN SERVO PHASE LOOP
CAPSTAN SERVO SPEED LOOP
CYLINDER SERVO PHASE LOOP
CYLINDER SERVO SPEED LOOP

REEL SERVO BLOCK DIAGRAM

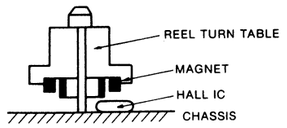

Hall IC

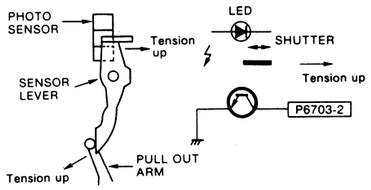

Takeup Tension Sensor

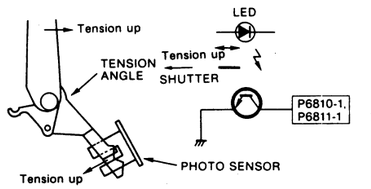

Supply Tension Sensor

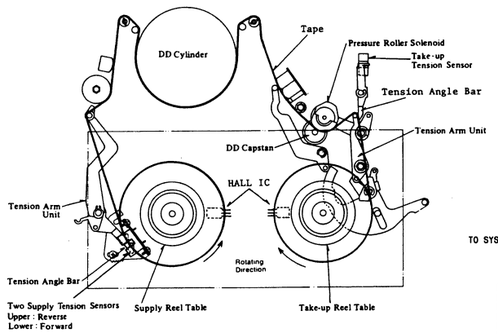

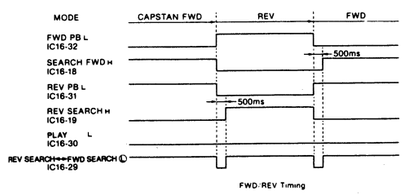

FWD/REV Timing

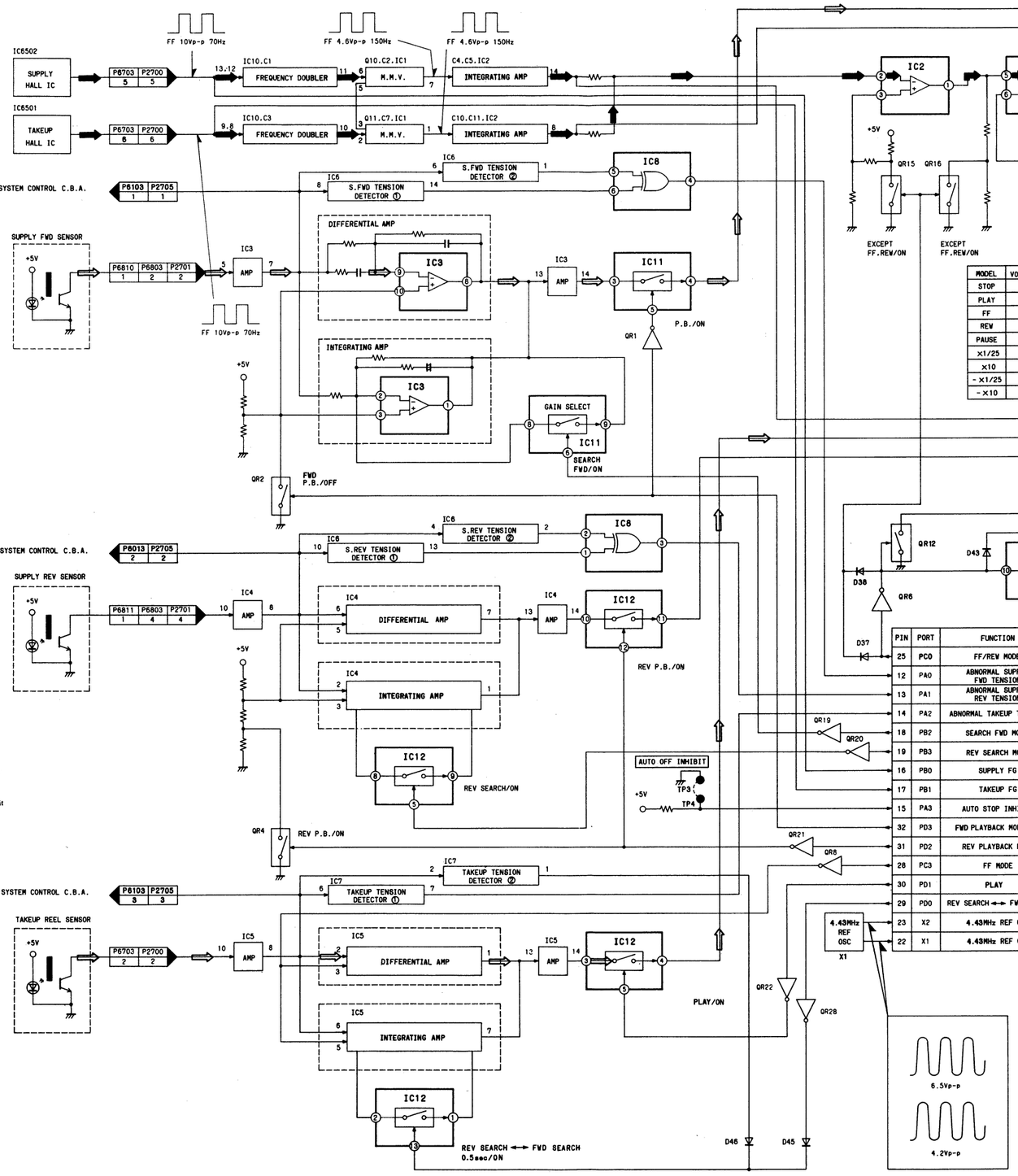

MODEL	VOLTAGE(E120.MIDD)
STOP	0V
PLAY	0.07V
FF	0.04V
REV	0.1V
PAUSE	0.08V
×1/25	0.08V
×10	0.08V
-×1/25	0.27V
-×10	0.22V

IC16

PIN	PORT	FUNCTION	ACTIVE		FUNCTION	PORT	PIN
25	PC0	FF/REV MODE	L	L	FF MODE	PC1	26
12	PA0	ABNORMAL SUPPLY FWD TENSION	L	L	FF MODE	PG2	3
13	PA1	ABNORMAL SUPPLY REV TENSION	L	L	SUB LOADING	PH0	5
14	PA2	ABNORMAL TAKEUP TENSION	L	L	LOADING	PH1	6
18	PB2	SEARCH FWD MODE	H	L	UNLOADING	PH2	7
19	PB3	REV SEARCH MODE	H	L	SUB UNLOADING	PH3	8
16	PB0	SUPPLY FG	----	L	REV MODE	PG3	4
17	PB1	TAKEUP FG	----	L	REV MODE	PC2	27
15	PA3	AUTO STOP INHIBIT	L	L	LOW,100msec.BEFORE LOADING COMPLETION	PF0	37
32	PD3	FWD PLAYBACK MODE	L	H	SUPPLY Ⓡ OFF	PE1	34
31	PD2	REV PLAYBACK MODE	L	H	TAKEUP Ⓡ OFF	PE0	33
28	PC3	FF MODE	L	L	RESET	RESET	24
30	PD1	PLAY	L	----	INTERRUPT REQUEST	INT	42
29	PD0	REV SEARCH ↔ FWD SEARCH	L (0.5SEC)	----	SERIAL DATA IN	SI	9
23	X2	4.43MHz REF OSC	----	----	SERIAL DATA OUT	SO	10
22	X1	4.43MHz REF OSC	----	----	SERIAL CLOCK	SCL	11

MODEL	VOLTAGE(E120.MIDD)
STOP	0V
PLAY	0.25V
FF	0.15V
REV	0.02V
PAUSE	0.1V
×1/25	0.26V
×10	0.3V
-×1/25	0.1V
-×10	0.09V

MAIN SIGNAL PATH FOR FF
MAIN SIGNAL PATH FOR PLA

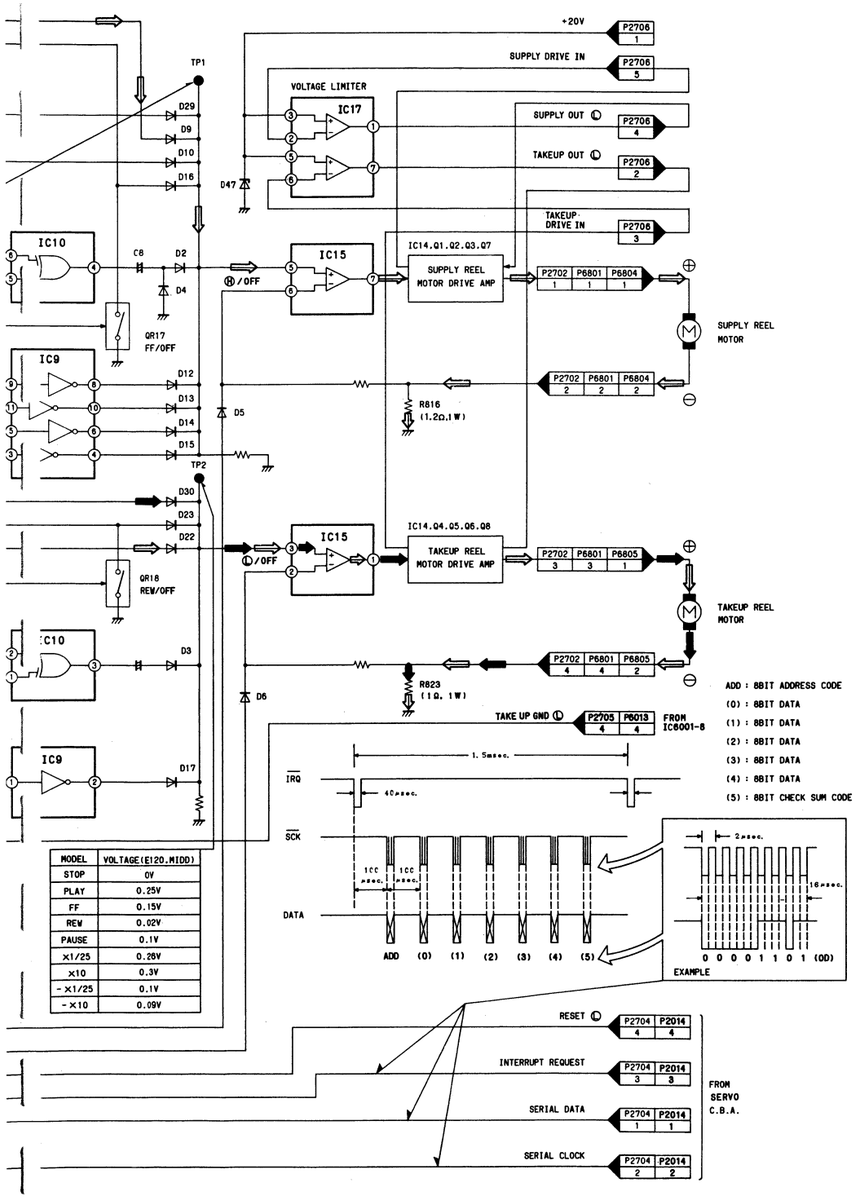

MODEL	VOLTAGE(E120.MIDD)
STOP	0V
PLAY	0.25V
FF	0.15V
REW	0.02V
PAUSE	0.1V
×1/25	0.26V
×10	0.3V
-×1/25	0.1V
-×10	0.09V

REF.NO.2700 SERIES

GNAL PATH FOR FF
SIGNAL PATH FOR PLAY

SUB VIDEO BLOCK DIAGRAM

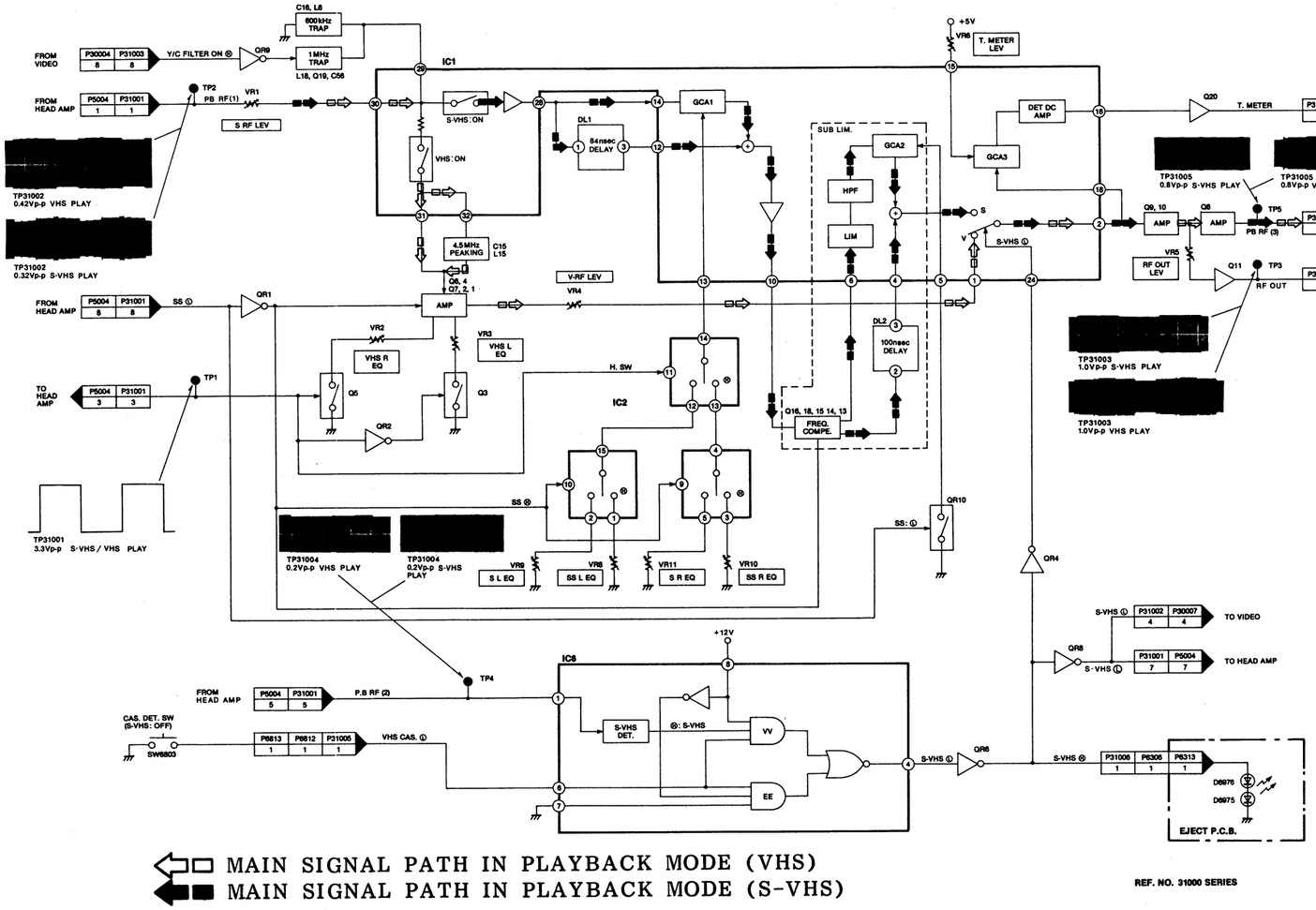

MAIN SIGNAL PATH IN PLAYBACK MODE (VHS)
MAIN SIGNAL PATH IN PLAYBACK MODE (S-VHS)

REF. NO. 31000 SERIES

CHROMINANCE BLOCK DIAGRAM

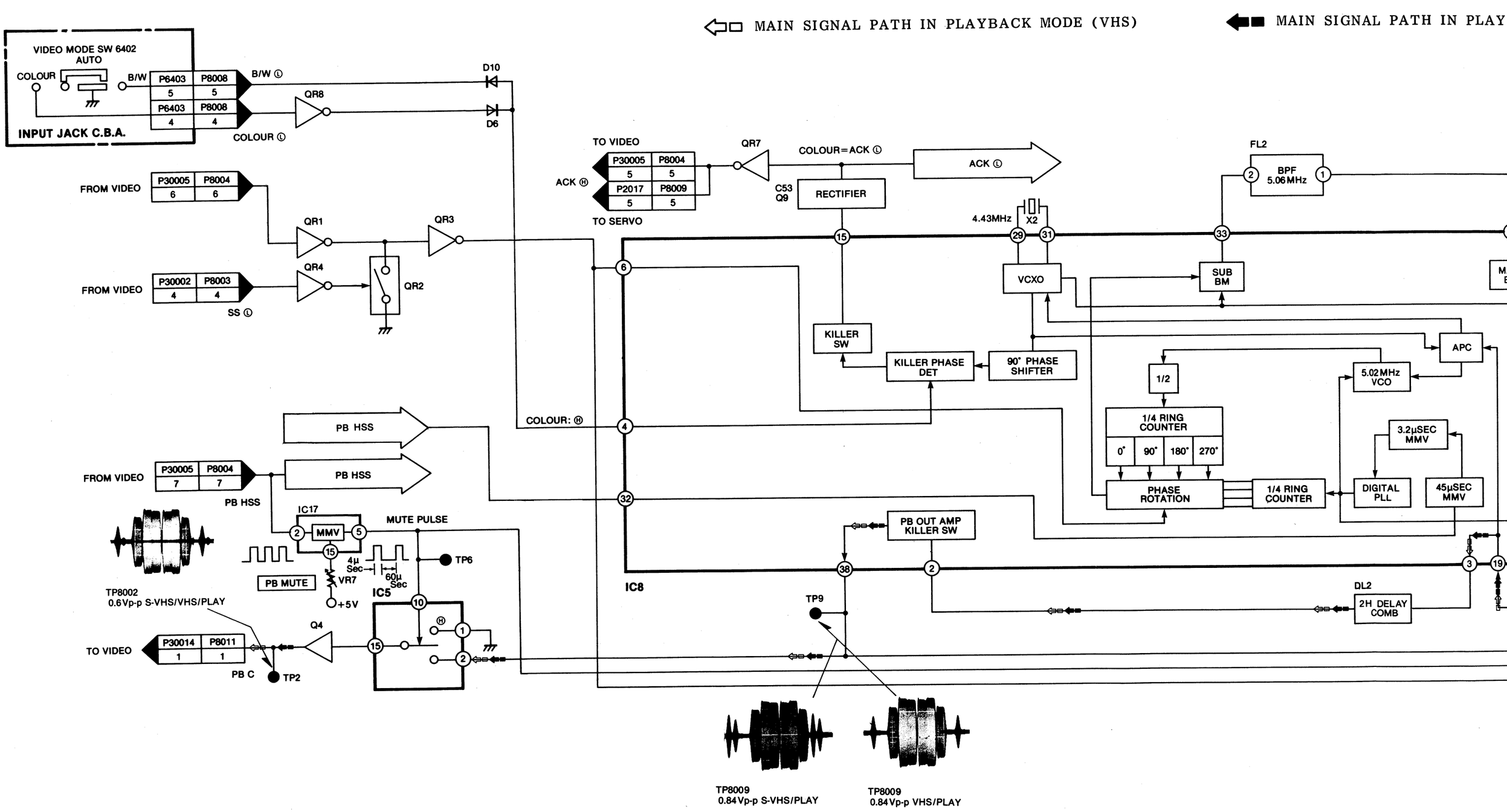

SIGNAL PATH IN PLAYBACK MODE (S-VHS)

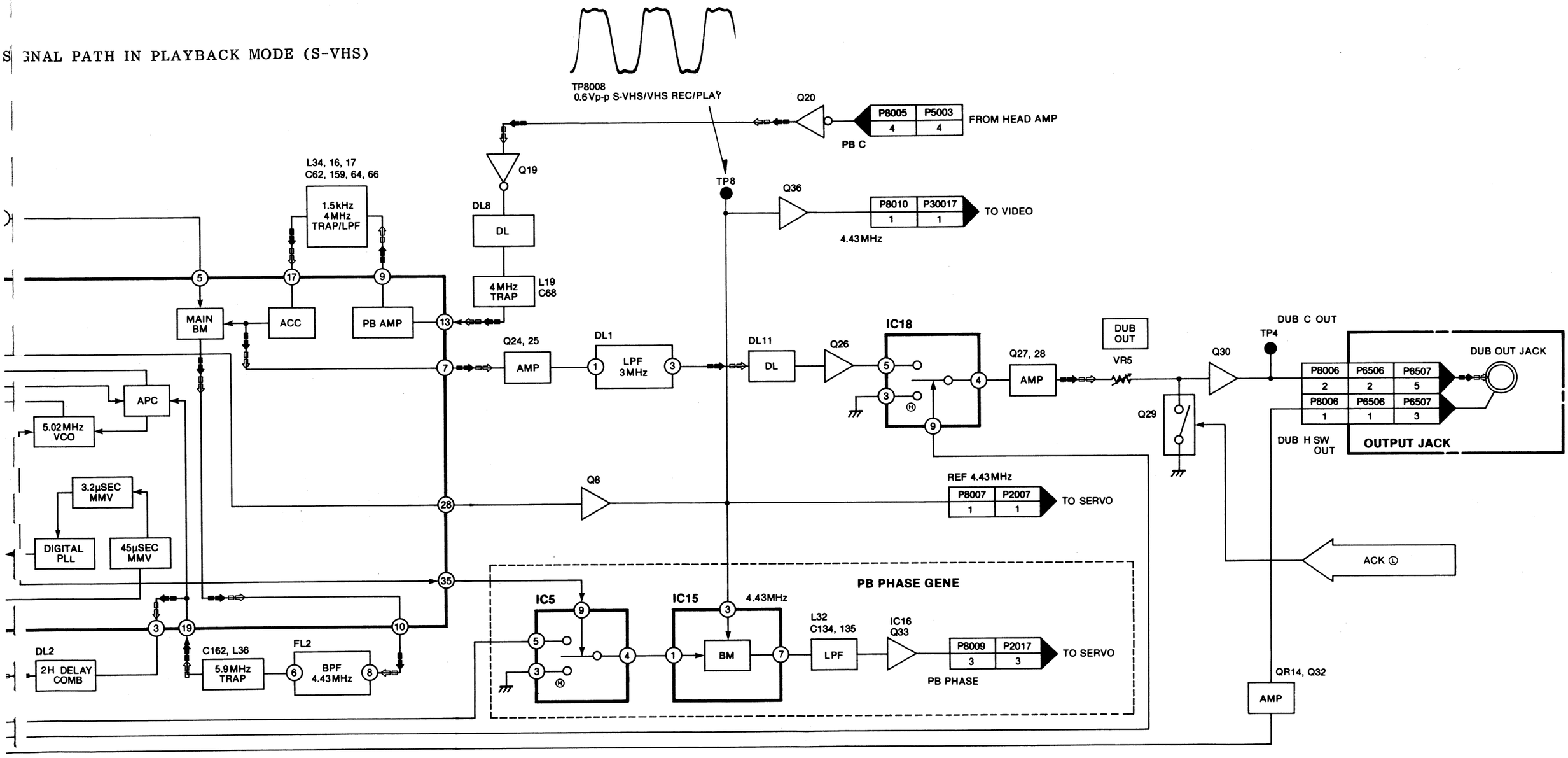

VIDEO BLOCK DIAGRAM

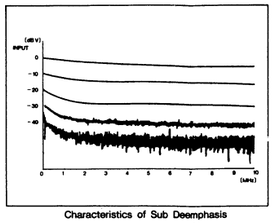

Characteristics of Sub Deemphasis

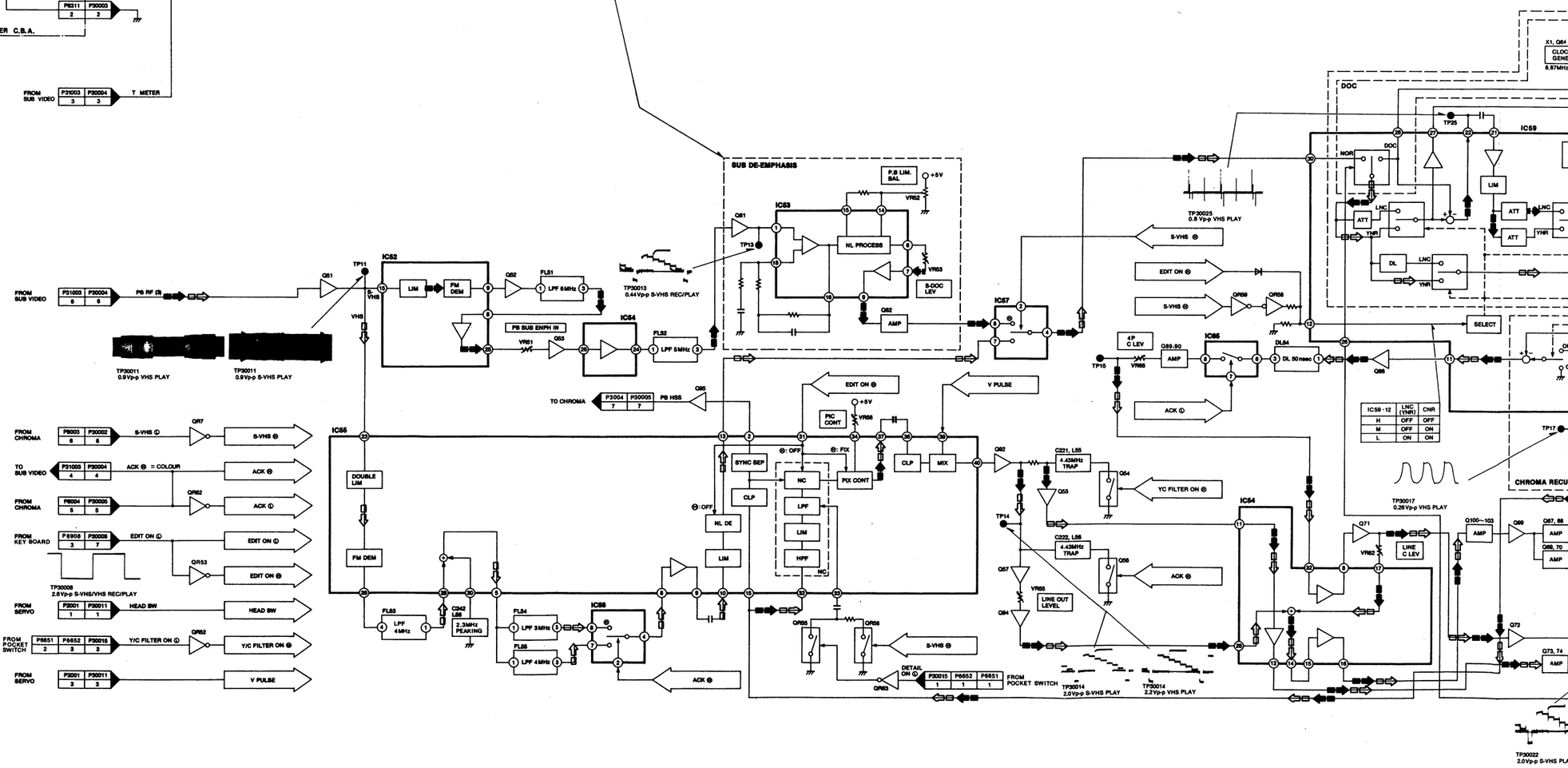

MAIN SIGNAL PATH IN PLAYBACK MODE (VHS)

MAIN SIGNAL PATH IN PLAYBACK MODE (S-VHS)

REF. NO. 30000 SERIES

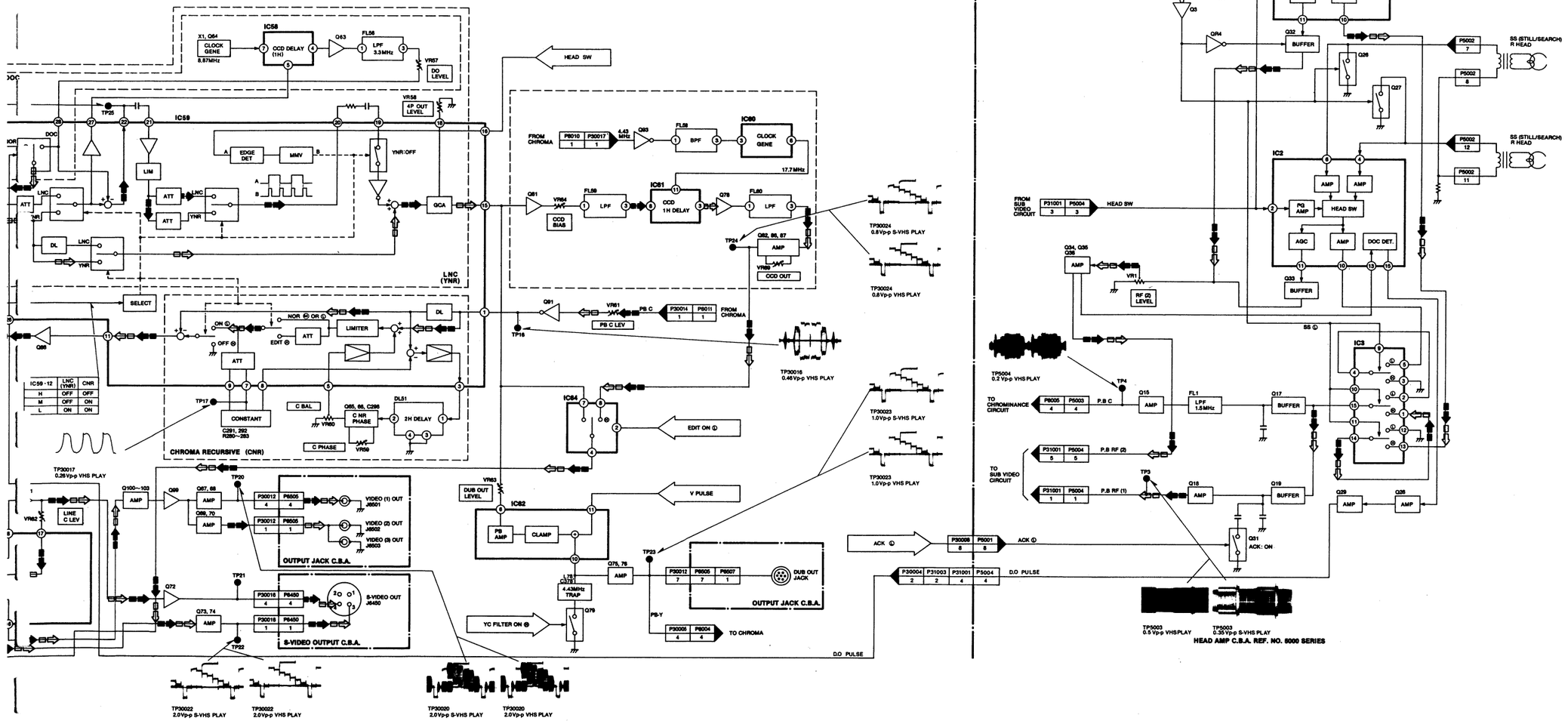

AUDIO CONTROL BLOCK DIAGRAM

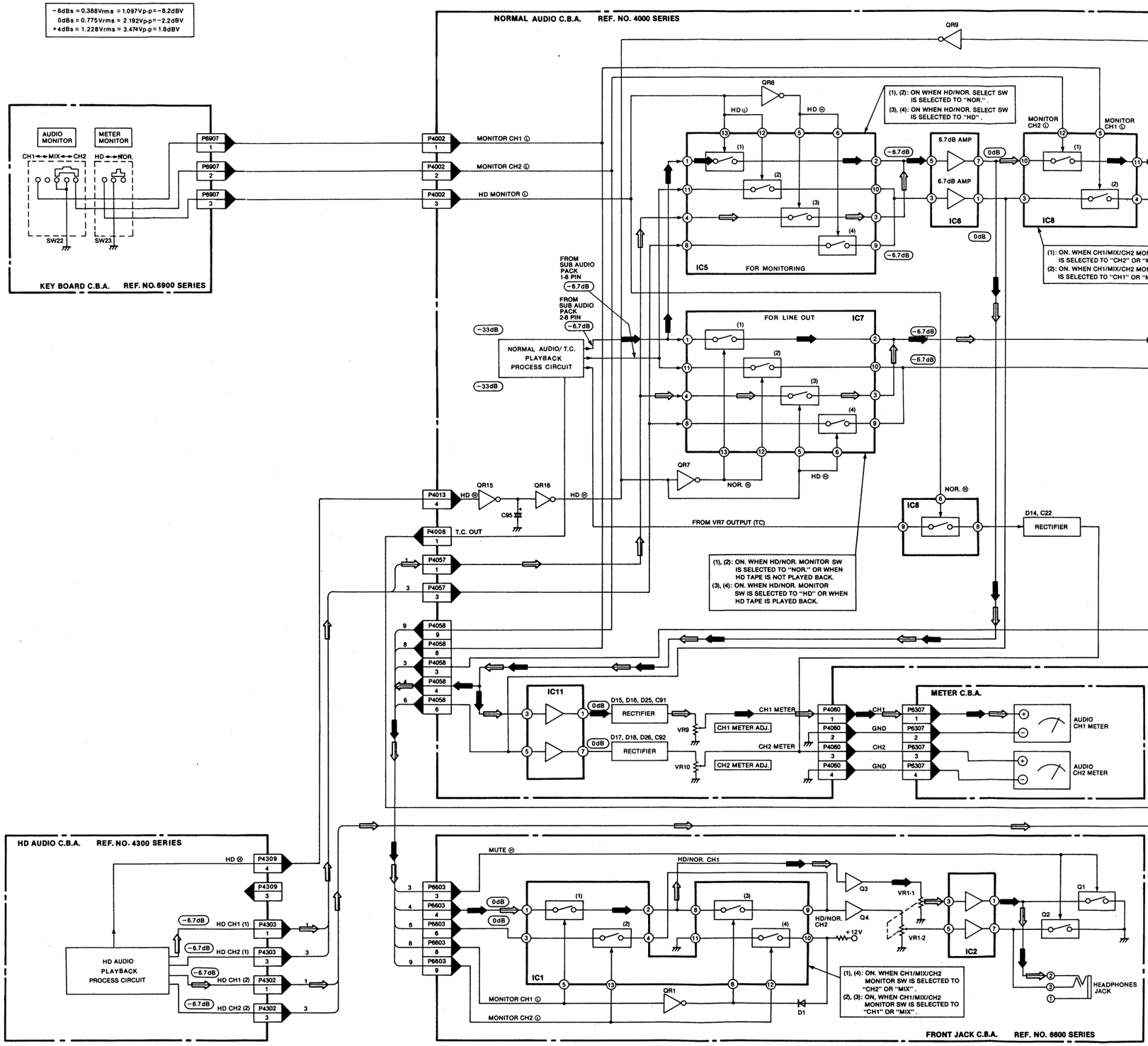

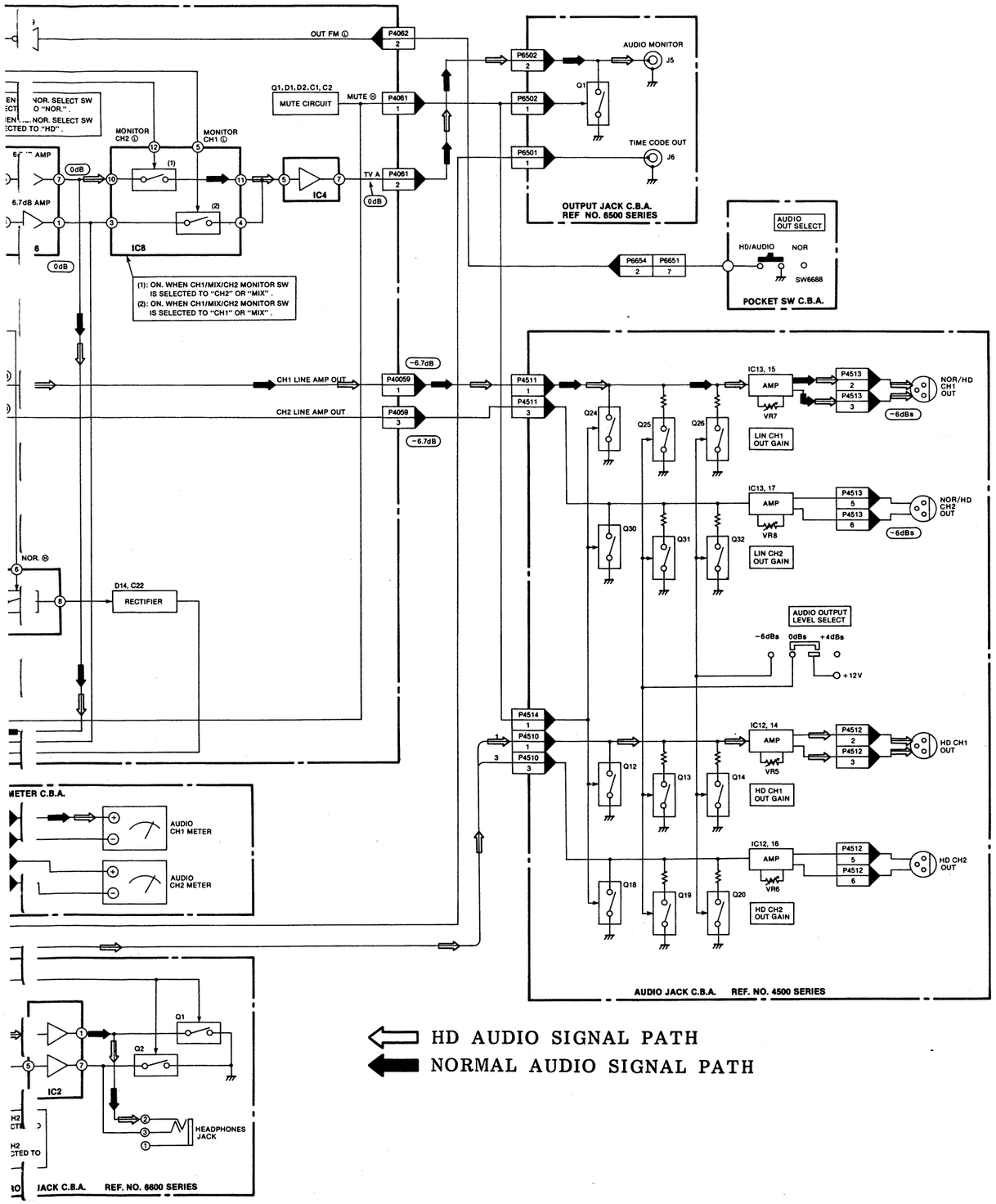
OUT FM
P4062
2
P6502
2
AUDIO MONITOR
J5
Q1,D1,D2,C1,C2
MUTE CIRCUIT
MUTE
P4061
1
P6502
1
Q1
TIME CODE OUT
J6
P6501
1
OUTPUT JACK C.B.A.
REF NO. 6500 SERIES
MONITOR CH2
MONITOR CH1
0dB
IC4
TV A
P4061
2
0dB
6.7dB AMP
IC8
(1): ON. WHEN CH1/MIX/CH2 MONITOR SW IS SELECTED TO "CH2" OR "MIX" .
(2): ON. WHEN CH1/MIX/CH2 MONITOR SW IS SELECTED TO "CH1" OR "MIX" .
AUDIO OUT SELECT
HD/AUDIO
NOR
SW6688
P6654
2
P6651
7
POCKET SW C.B.A.
CH1 LINE AMP OUT
CH2 LINE AMP OUT
P4059
1
P4059
3
−6.7dB
−6.7dB
P4511
1
P4511
3
IC13, 15
AMP
VR7
LIN CH1 OUT GAIN
Q24
Q25
Q26
P4513
2
P4513
3
NOR/HD CH1 OUT
−6dBs
IC13, 17
AMP
VR8
LIN CH2 OUT GAIN
Q30
Q31
Q32
P4513
5
P4513
6
NOR/HD CH2 OUT
−6dBs
AUDIO OUTPUT LEVEL SELECT
−6dBs
0dBs
+4dBs
+12V
P4514
1
P4510
1
P4510
3
IC12, 14
AMP
VR5
HD CH1 OUT GAIN
Q12
Q13
Q14
P4512
2
P4512
3
HD CH1 OUT
IC12, 16
AMP
VR6
HD CH2 OUT GAIN
Q18
Q19
Q20
P4512
5
P4512
6
HD CH2 OUT
AUDIO JACK C.B.A. REF. NO. 4500 SERIES
NOR.
D14, C22
RECTIFIER
METER C.B.A.
AUDIO CH1 METER
AUDIO CH2 METER
Q1
Q2
IC2
HEADPHONES JACK
JACK C.B.A. REF. NO. 6600 SERIES
HD AUDIO SIGNAL PATH
NORMAL AUDIO SIGNAL PATH

HD AUDIO BLOCK DIAGRAM

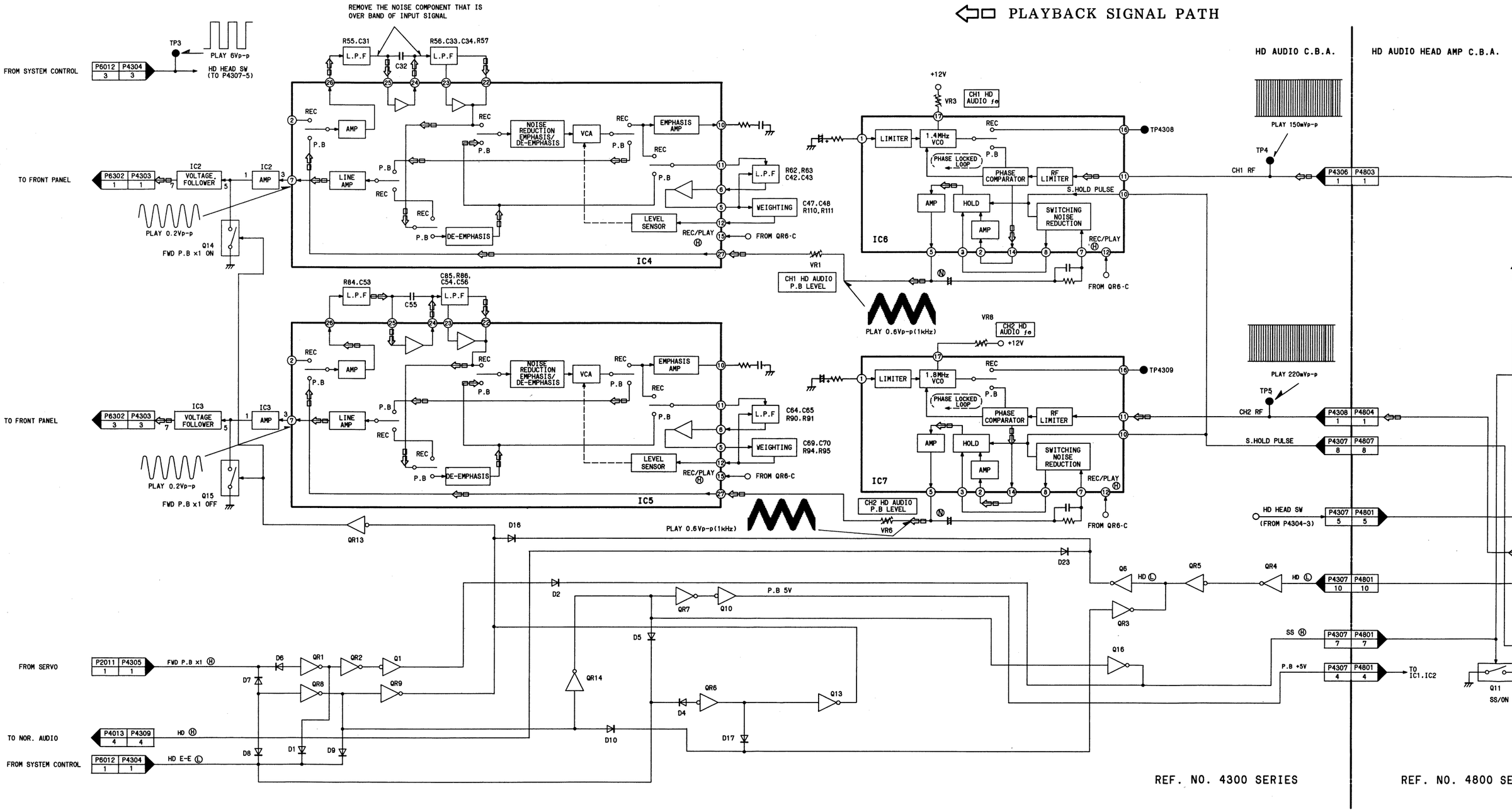

HD AUDIO BLOCK

NORMAL AUDIO BLOCK

PLAYBACK SIGNAL PATH

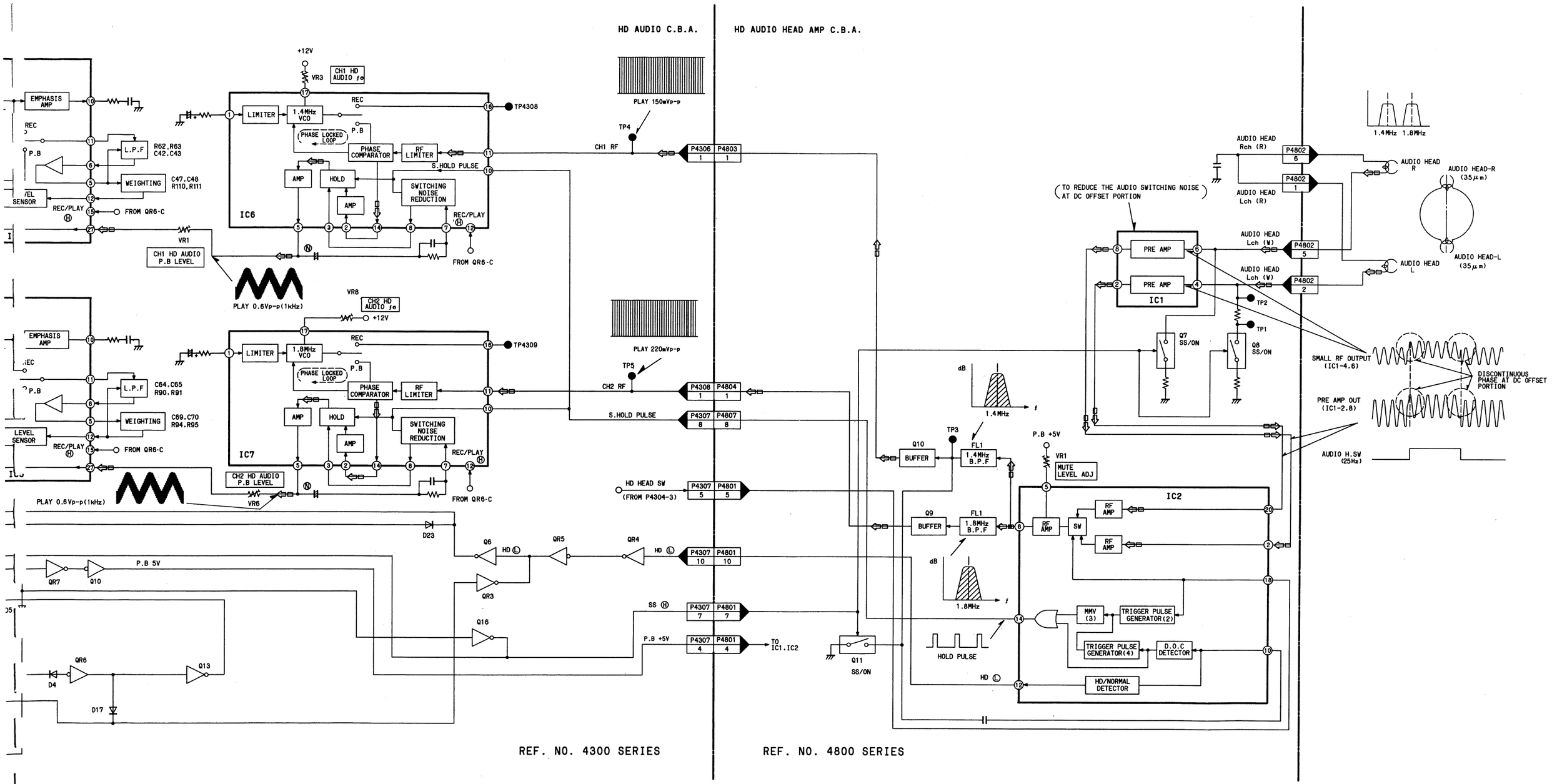

REF. NO. 4300 SERIES

REF. NO. 4800 SERIES

NORMAL AUDIO BLOCK DIAGRAM

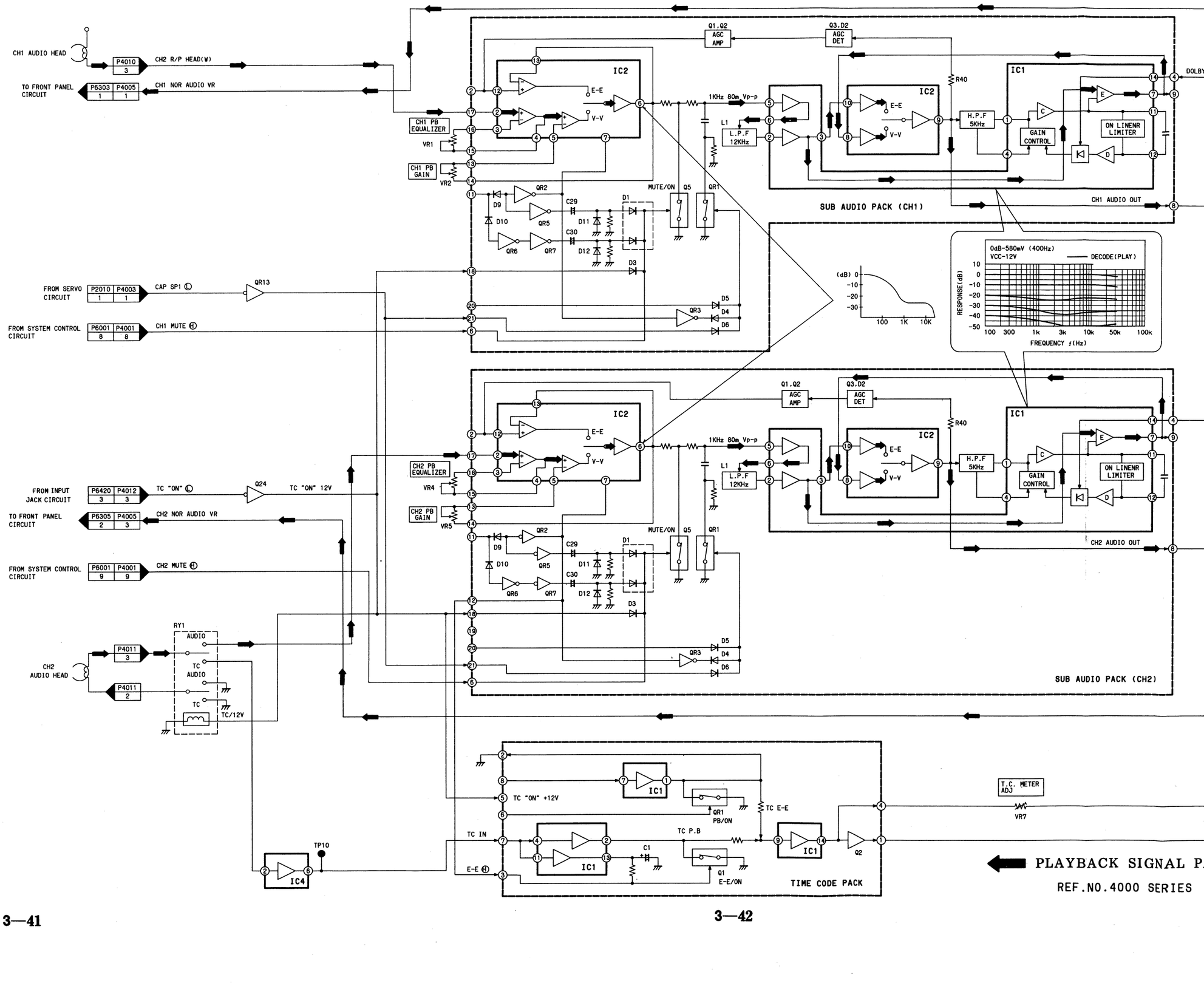

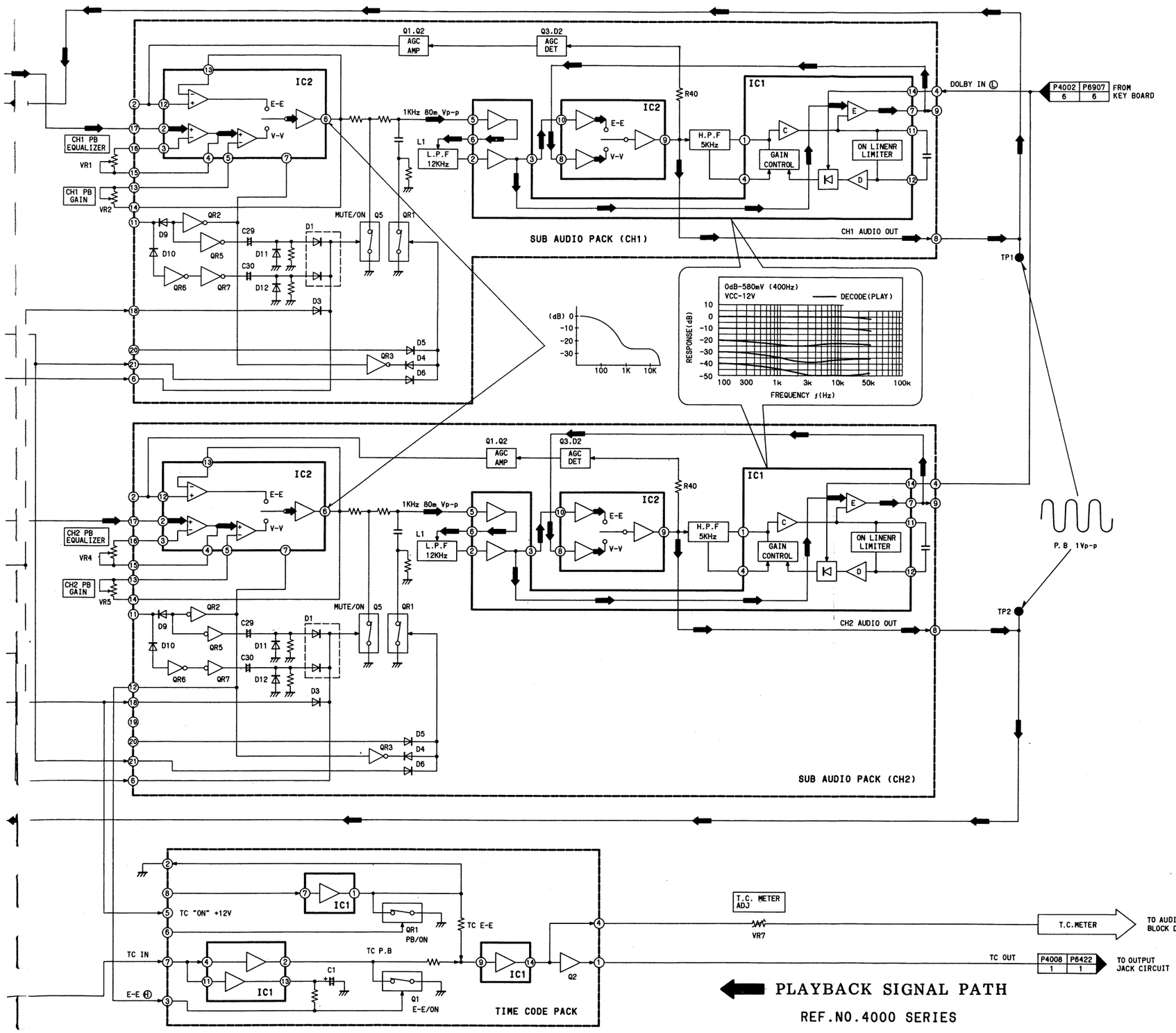

PLAYBACK SIGNAL PATH

REF.NO.4000 SERIES

POWER SUPPLY SCHEMATIC DIAGRAM

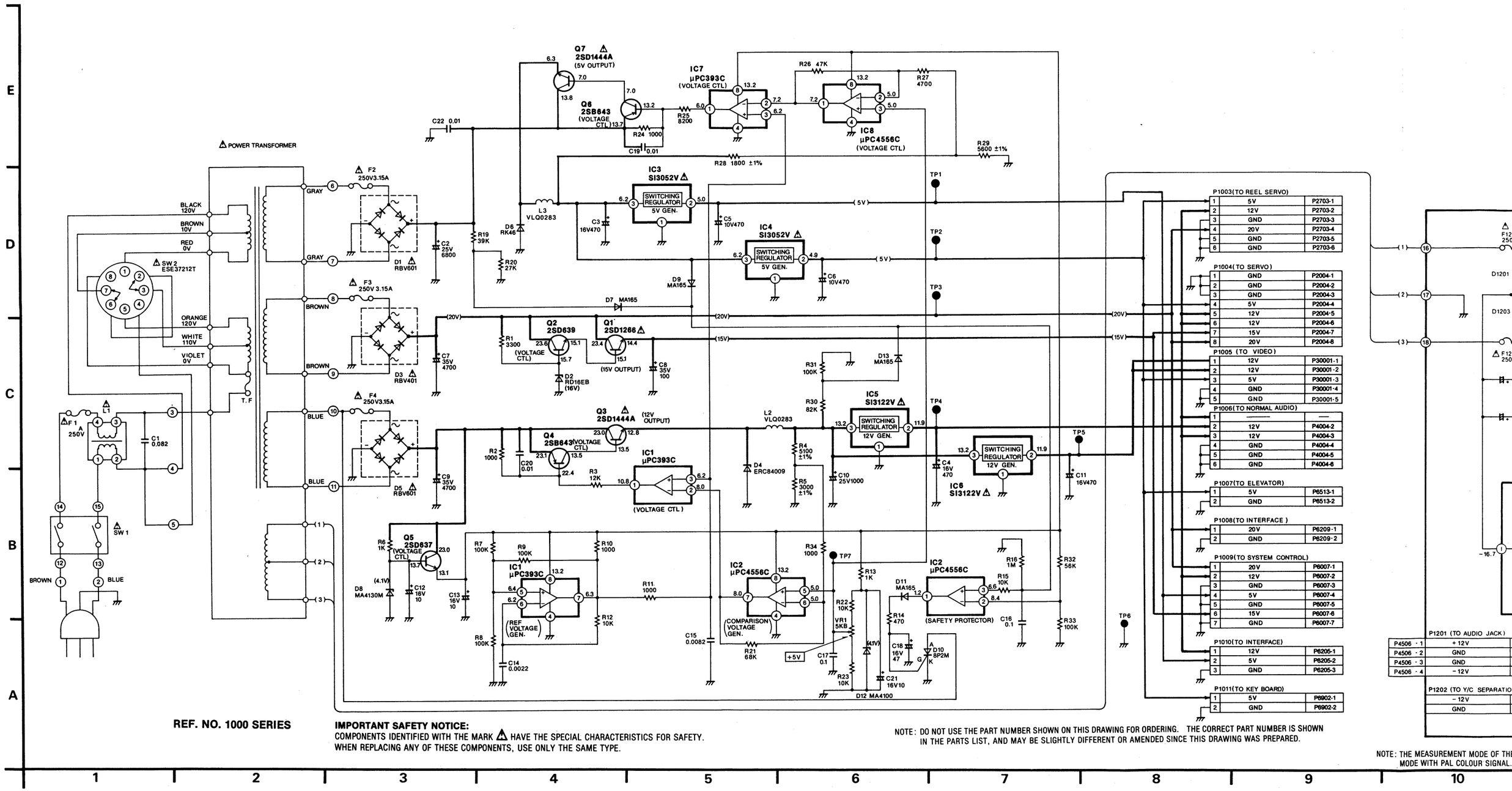

REF. NO. 1000 SERIES

IMPORTANT SAFETY NOTICE:
COMPONENTS IDENTIFIED WITH THE MARK ⚠ HAVE THE SPECIAL CHARACTERISTICS FOR SAFETY.
WHEN REPLACING ANY OF THESE COMPONENTS, USE ONLY THE SAME TYPE.

NOTE: DO NOT USE THE PART NUMBER SHOWN ON THIS DRAWING FOR ORDERING. THE CORRECT PART NUMBER IS SHOWN IN THE PARTS LIST, AND MAY BE SLIGHTLY DIFFERENT OR AMENDED SINCE THIS DRAWING WAS PREPARED.

NOTE: THE MEASUREMENT MODE OF THI
MODE WITH PAL COLOUR SIGNAL.

POWER SUPPLY C.B.A. (VEP01395A)

P1003(TO REEL SERVO)

1	5V	P2703-1
2	12V	P2703-2
3	GND	P2703-3
4	20V	P2703-4
5	GND	P2703-5
6	GND	P2703-6

4(TO SERVO)

1	GND	P2004-1
2	GND	P2004-2
3	GND	P2004-3
4	5V	P2004-4
5	12V	P2004-5
6	12V	P2004-6
7	15V	P2004-7
8	20V	P2004-8

P1005 (TO VIDEO)

1	12V	P30001-1
2	12V	P30001-2
3	5V	P30001-3
4	GND	P30001-4
5	GND	P30001-5

P1006(TO NORMAL AUDIO)

1	———	—
2	12V	P4004-2
3	12V	P4004-3
4	GND	P4004-4
5	GND	P4004-5
6	GND	P4004-6

7(TO ELEVATOR)

1	5V	P6513-1
2	GND	P6513-2

P1008(TO INTERFACE)

1	20V	P6209-1
2	GND	P6209-2

P1009(TO SYSTEM CONTROL)

1	20V	P6007-1
2	12V	P6007-2
3	GND	P6007-3
4	5V	P6007-4
5	GND	P6007-5
6	15V	P6007-6
7	GND	P6007-7

(TO INTERFACE)

1	12V	P6205-1
2	5V	P6205-2
3	GND	P6205-3

1(TO KEY BOARD)

1	5V	P6902-1
2	GND	P6902-2

ORRECT PART NUMBER IS SHOWN
DRAWING WAS PREPARED.

SUB POWER SUPPLY C.B.A. (VEP01347A)

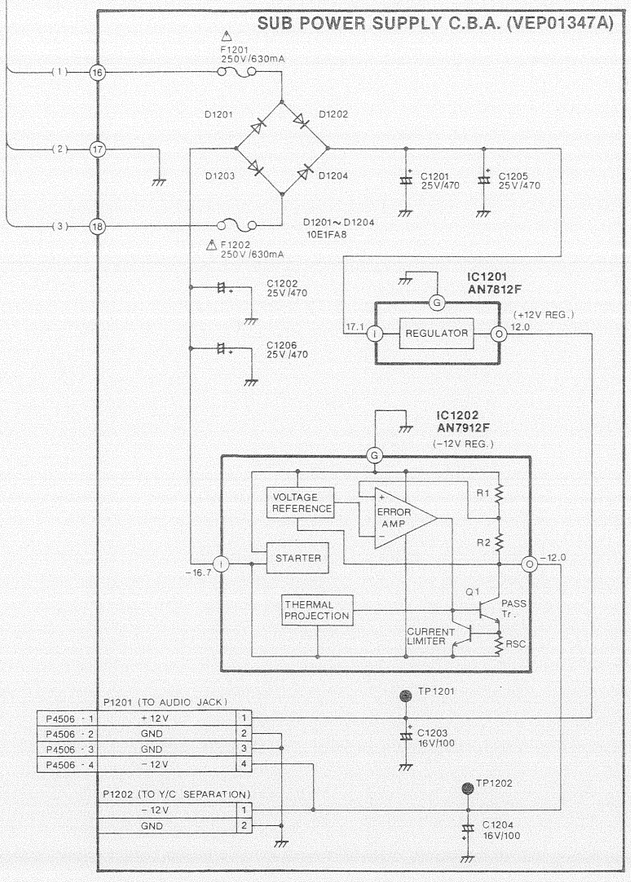

NOTE: THE MEASUREMENT MODE OF THE DC VOLTAGE OUT OF THE BRACKETS ON THIS DIAGRAM IS PLAYBACK MODE WITH PAL COLOUR SIGNAL. MEASUREMENT TAPE...S-VHS CASSETTE TAPE.

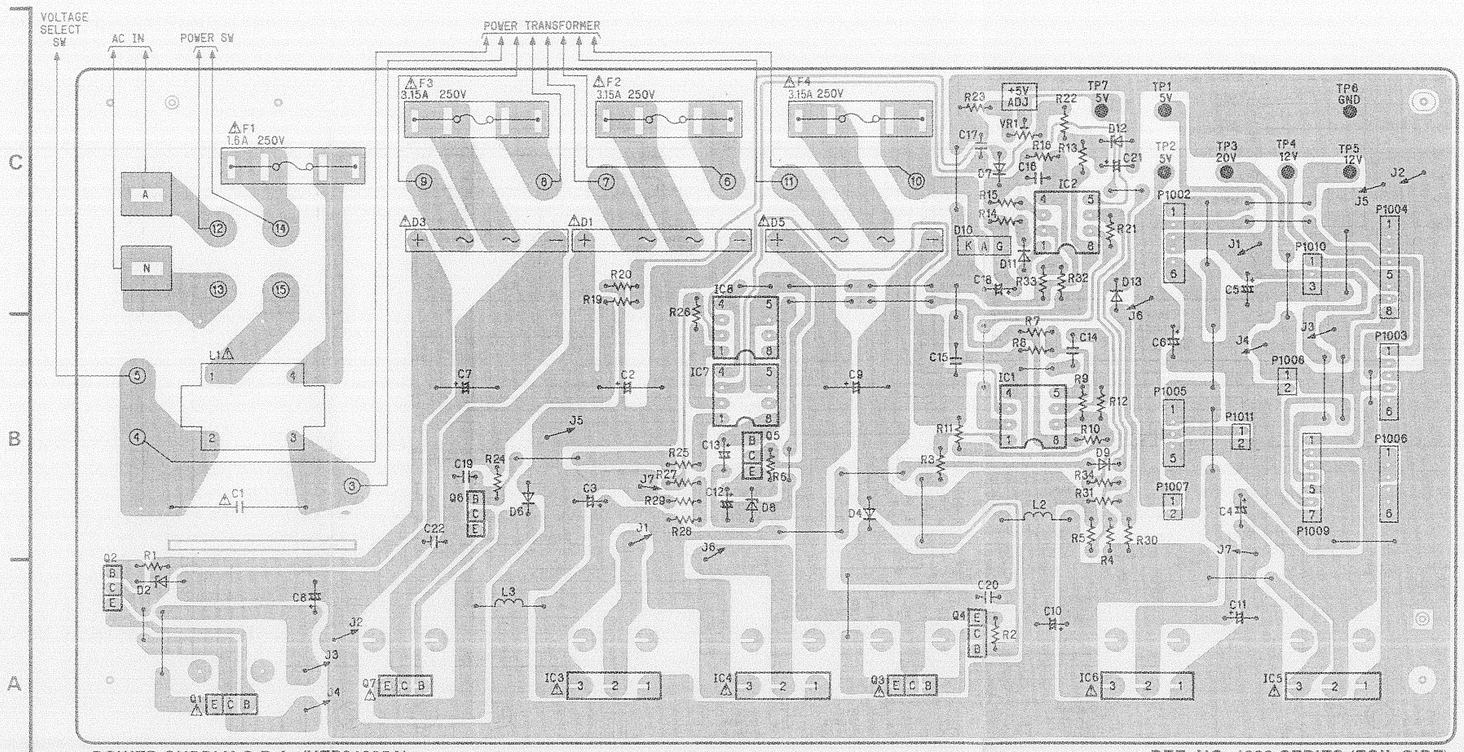

POWER SUPPLY C.B.A. (VEP01395A)

REF. NO. 1000 SERIES (FOIL SIDE)

UPPLY C.B.A. (VEP01395A)

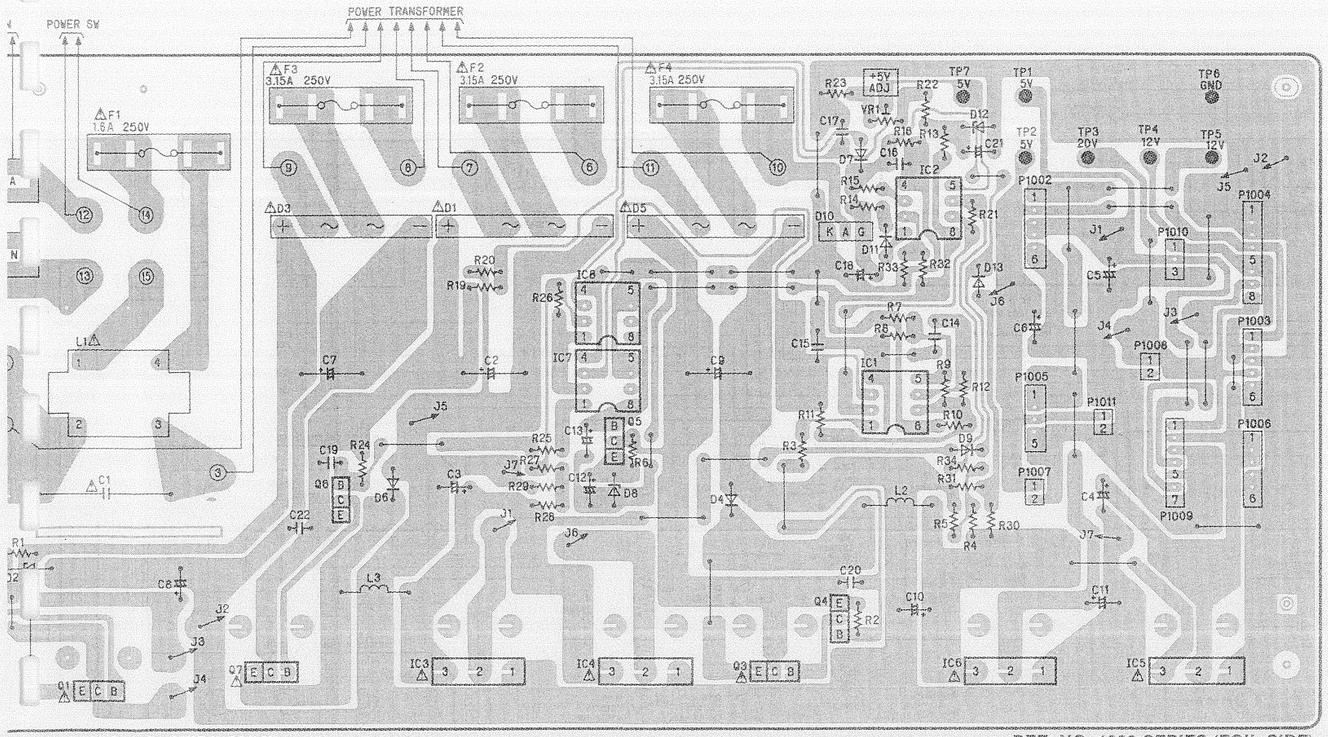

EP SUPPLY C.B.A. (VEP01395A)

REF. NO. 1000 SERIES (FOIL SIDE)

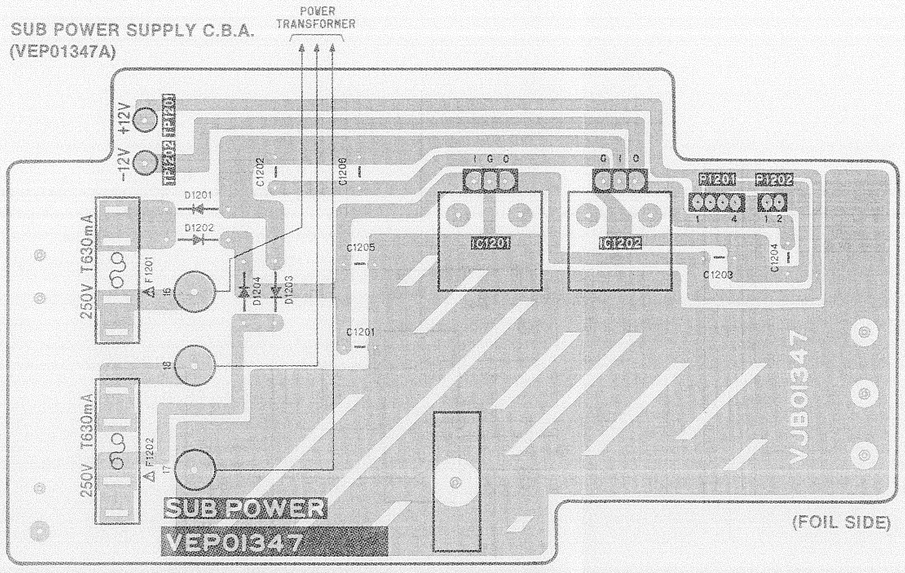

(FOIL SIDE)

POWER SUPPLY & SUB POWER SUPPLY C.B.A.	
Transistor	
Q1001	A-1
Q1002	A-1
Q1003	A-4
Q1004	A-4
Q1005	B-3
Q1006	B-2
Q1007	A-2
Integrated Circuit	
IC1001	B-5
IC1002	C-5
IC1003	A-3
IC1004	A-3
IC1005	A-6
IC1006	A-5
IC1007	B-3
IC1008	C-3
IC1201	B-8
IC1202	B-9
Test Point	
TP1001	C-5
TP1002	C-5
TP1003	C-5
TP1004	C-6
TP1005	C-6
TP1006 (GND)	C-6
TP1007	C-5
TP1201	C-7
TP1202	B-7
Adjustment	
VR1001	C-4
Connector	
P1002	C-5
P1003	B-6
P1004	C-6
P1005	B-5
P1006	B-6
P1007	B-5
P1008	B-6
P1009	B-6
P1010	C-6
P1011	B-5
P1201	B-9
P1202	B-10

ADDRESS INFORMATION

SYSTEM CONTROL SCHEMATIC DIAGRAM

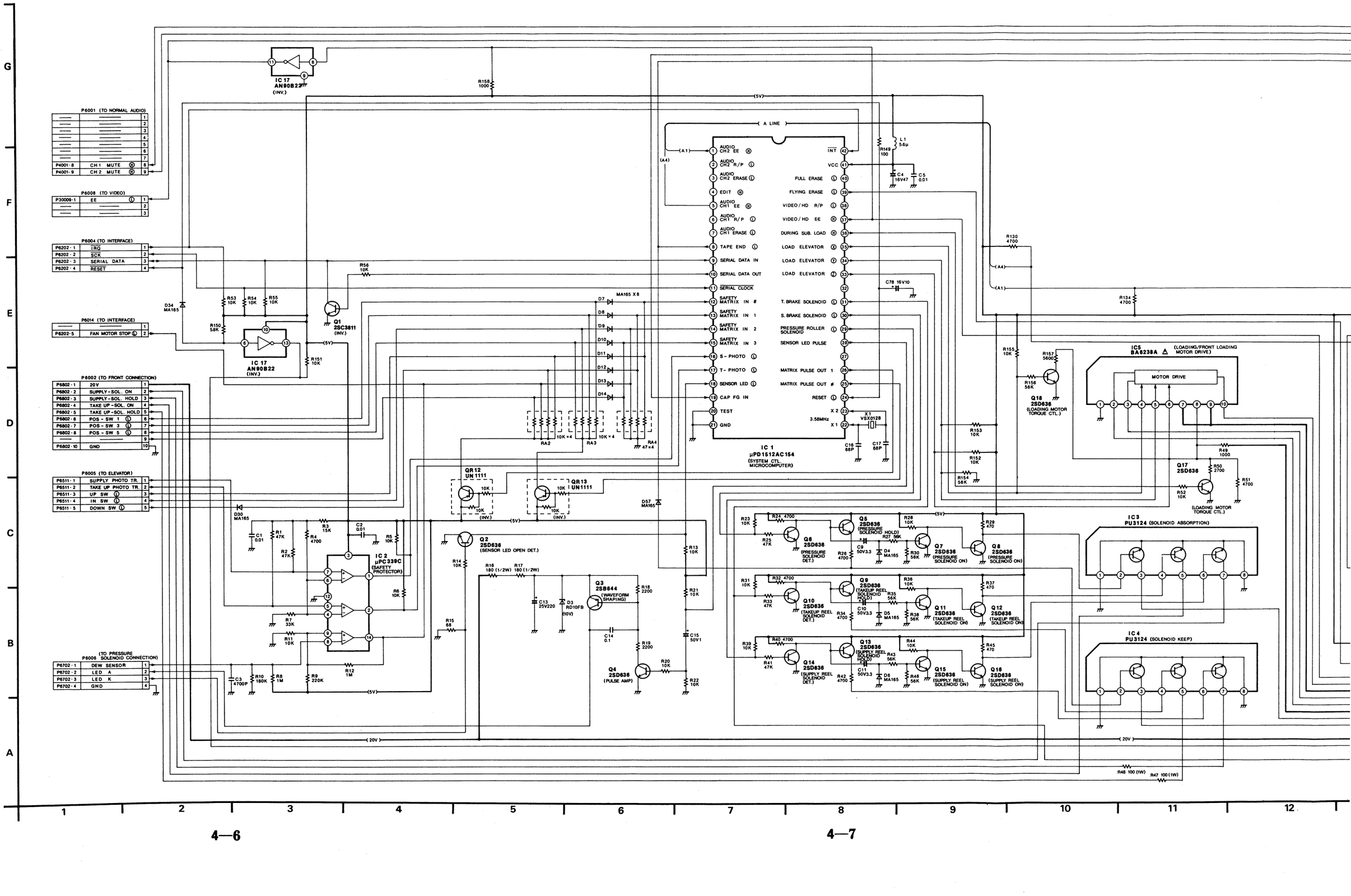

NOTE: DO NOT USE THE PART NUMBER SHOWN ON THIS DRAWING FOR ORBERING. THE CORRECT PART NUMBER IS SHOWN IN THE PARTS LIST, AND MAY BE SLIGHTLY DIFFERENT OR AMENDED SINCE THIS DRAWING WAS PREPARED.

REF. NO. 6000 SERIES

P6012 (TO HD AUDIO)

1	HD EE Ⓛ	P4304 · 1
2	——	——
3	HD HEAD SW	P4304 · 3

P6013 (TO REEL SERVO)

1	S. F. SENSOR	P2705 · 1
2	S. R. SENSOR	P2705 · 2
3	T. SENSOR	P2705 · 3
4	T. END Ⓛ	P2705 · 4

P6003 (TO SERVO)

1	HEAD SW PULSE	P2002 · 1
2	CAP - FG	P2002 · 2
3	BRAKE OFF Ⓛ	P2002 · 3

P6007 (TO POWER)

1	20 V	P1009 · 1
2	12 V	P1009 · 2
3	GND	P1009 · 3
4	5V	P1009 · 4
5	GND	P1009 · 5
6	15V	P1009 · 6
7	GND	P1009 · 7

(TO PRESSURE SOLENOID CONNECTION)
P6010

1	20V	P6701 · 1
2	PRESSURE ROLLER ON	P6701 · 2
3	PRESSURE ROLLER HOLD	P6701 · 3
4	LOADING MOTOR Ⓘ	P6701 · 4
5	LOADING MOTOR Ⓡ	P6701 · 5

P6011 (TO ELEVATOR)

1	ELEVATOR MOTOR Ⓘ	P6512 · 1
2	ELEVATOR MOTOR Ⓡ	P6512 · 2

NOTE: THE MEASUREMENT MODE OF THE DC VOLTAGE IN THE BRACKETS ( ) ON THIS DIAGRAM IS STOP MODE.
THE MEASUREMENT MODE OF THE DC VOLTAGE OUT OF THE BRACKETS ON THIS DIAGRAM IS PLAYBACK MODE WITH PAL COLOUR SIGNAL. MEASUREMENT TAPE...S-VHS CASSETTE TAPE.

IMPORTANT SAFETY NOTICE:
COMPONENTS IDENTIFIED WITH THE MARK ⚠ HAVE THE SPECIAL CHARACTERISTICS FOR SAFETY.
WHEN REPLACING ANY OF THESE COMPONENTS. USE ONLY THE SAME TYPE.

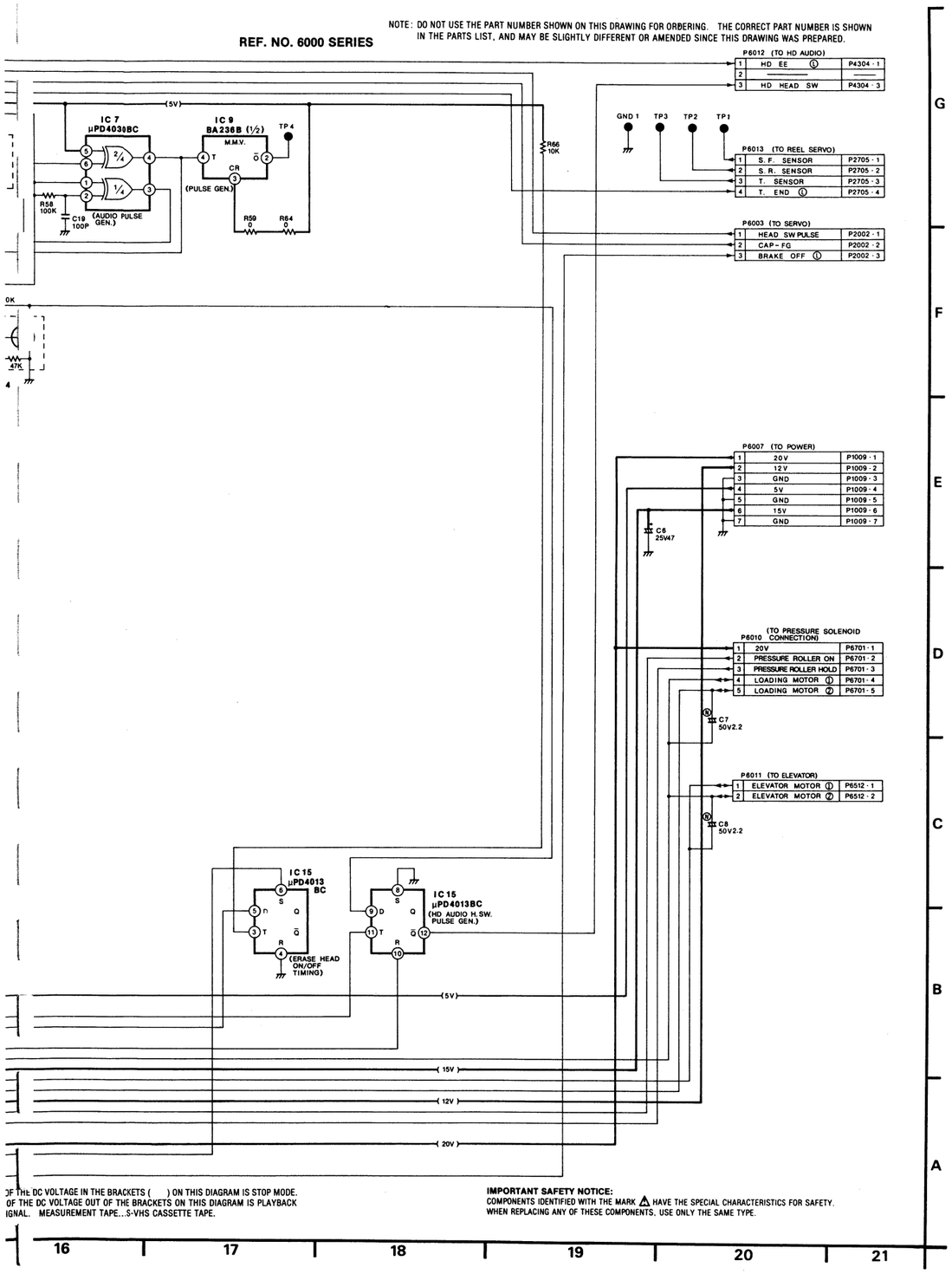

OF THE DC VOLTAGE IN THE BRACKETS ( ) ON THIS DIAGRAM IS STOP MODE.
OF THE DC VOLTAGE OUT OF THE BRACKETS ON THIS DIAGRAM IS PLAYBACK IGNAL. MEASUREMENT TAPE...S-VHS CASSETTE TAPE.

IMPORTANT SAFETY NOTICE:
COMPONENTS IDENTIFIED WITH THE MARK ⚠ HAVE THE SPECIAL CHARACTERISTICS FOR SAFETY. WHEN REPLACING ANY OF THESE COMPONENTS, USE ONLY THE SAME TYPE.

SYSTEM CONTROL ICs DC VOLTAGE CHART

REF. NO.	IC6001																			
MODE	1	2	3	4	5	6	7	8	9	10	11	12	13	14	15	16	17	18	19	20
STOP	3.0	3.6	3.7	0	3.4	3.7	3.7	3.9	3.6	0.6	4.7	3.4	0.6	3.3	3.3	4.4	4.4	3.0	0.4	0
PLAY	0	3.8	3.8	0	0	3.8	3.8	4.0	3.6	0.2	4.8	3.7	0.3	3.7	3.6	5.0	5.0	0	2.4	0
F.F.	3.0	3.8	3.8	0	3.3	3.8	3.8	4.0	3.8	0.2	4.8	3.8	0.2	3.7	3.7	5.0	5.0	3.5	0.1	0

REF. NO.	IC6001																			
MODE	21	22	23	24	25	26	27	28	29	30	31	32	33	34	35	36	37	38	39	40
STOP	0	1.7	1.1	4.9	4.9	0.1	0.3	0.4	4.2	4.2	3.6	0	0	0	0	0	4.2	3.8	3.8	3.8
PLAY	0	1.7	1.0	4.9	4.9	0.1	0.3	0.5	0	0	0	0	0	0	0	0	0.1	3.8	3.8	3.8
F.F.	0	1.7	1.0	4.9	4.9	0.1	0.3	0.5	4.2	0	0	0	0	0	0	0	4.2	3.8	3.8	3.8

REF. NO.	IC6001																			
MODE	41	42																		
STOP	5.0	4.7																		
PLAY	5.0	4.7																		
F.F.	4.9	4.7																		

REF. NO.	IC6002																			
MODE	1	2	3	4	5	6	7	8	9	10	11	12	13	14						
STOP	5.0	5.0	5.0	3.1	3.5	3.1	3.5	0	0.3	0.4	0.4	0	0	4.1						
PLAY	5.0	5.0	5.0	3.1	3.5	3.1	3.5	0	0.3	0.4	0.4	0	0	4.1						
F.F.	5.0	5.0	5.0	3.1	3.5	3.1	3.5	0	0.3	0.4	0.4	0	0	4.1						

REF. NO.	IC6003										IC6004									
MODE	1	2	3	4	5	6	7	8			1	2	3	4	5	6	7	8		
STOP	0	0.1	21.5	0.1	21.5	0.1	21.5	0			0	0.1	0	0.1	21.6	0	21.6	0		
PLAY	0	0.1	19.5	0.1	19.5	0.1	19.6	0			0	1.3	0.7	1.3	0.7	1.3	0.7	0		
F.F.	0	0.1	20.9	0.1	20.1	0.1	20.2	0			0	0.1	21.0	1.3	0.7	1.3	0.7	0		

REF. NO.	IC6005																			
MODE	1	2	3	4	5	6	7	8	9	10										
STOP	0	0.6	0.6	0	0	0	14.5	9.9	14.5	0.6										
PLAY	0	0.6	0.6	0	0	0	14.5	9.9	14.5	0.6										
F.F.	0	0.6	0.6	0	0	0	14.5	9.9	14.5	0.6										

REF. NO.	IC6007																			
MODE	1	2	3	4	5	6	7	8	9	10	11	12	13	14						
STOP	3.8	3.7	0	4.9	5.0	0	0	0	0	0	5.0	0	5.0	5.0						
PLAY	2.3	2.3	0	4.8	5.0	0	0	0	0	0	2.1	3.9	5.0	5.0						
F.F.	3.2	2.0	0	4.8	5.0	0	0	0	0	0	2.1	3.8	5.0	5.0						

REF. NO.	IC6009																			
MODE	1	2	3	4	5	6	7	8	9											
STOP	5.0	0	5.0	4.9	0	4.9	0	0	5.0											
PLAY	5.0	0	5.0	4.8	0	4.8	0.8	3.9	5.0											
F.F.	5.0	0	5.0	4.8	0	4.8	0.8	3.5	5.0											

REF. NO.	IC6015																			
MODE	1	2	3	4	5	6	7	8	9	10	11	12	13	14						
STOP	5.0	0	5.0	0	3.8	0	0	0	0	4.2	5.0	4.9	0	5.0						
PLAY	5.0	0	5.0	0	3.8	0	0	0	3.1	0.1	2.1	2.1	4.7	5.0						
F.F.	5.0	0	5.0	0	3.8	0	0	0	3.1	4.2	2.1	4.9	0	5.0						

REF. NO.	IC6017																			
MODE	1	2	3	4	5	6	7	8	9	10	11	12	13	14	15	16	17	18		
STOP	0	0	0	0	0	2.7	0	4.2	0	0	0	0.2	0	0.2	0.2	0.2	0.2	0.2		
PLAY	0	0	0	0	0	2.7	0	0.1	0	0	4.7	0.2	0	0.2	0.2	0.2	0.2	0.2		
F.F.	0	0	0	0	0	2.7	0	4.2	0	0	0	0.2	0	0.2	0.2	0.2	0.2	0.2		

SYSTEM CONTROL TRANSISTORs DC VOLTAGE CHART

REF. NO.	Q6001			Q6002			Q6003			Q6004			Q6005			Q6006		
MODE	E	C	B	E	C	B	E	C	B	E	C	B	E	C	B	E	C	B
STOP	0	0.1	3.7	0	3.5	0.2	9.6	4.0	9.3	0	7.5	0.4	0.1	5.0	0	0	0	0.6
PLAY	0	0.1	3.8	0	3.5	0.3	9.6	4.1	9.3	0	7.5	0.4	4.3	5.0	5.0	0	5.0	0
F.F.	0	0.1	3.6	0	3.5	0.3	9.6	4.0	9.3	0	7.7	0.4	0.1	5.0	0	0	0	0.6

REF. NO.	Q6007			Q6008			Q6009			Q6010			Q6011			Q6012		
MODE	E	C	B	E	C	B	E	C	B	E	C	B	E	C	B	E	C	B
STOP	0	0.7	0	0	0.1	0.7	0.1	5.0	0	0	0	0.6	0	0.7	0	0	0.1	0.7
PLAY	0	0.7	0	0	0.1	0.7	4.3	5.0	5.0	0	5.0	0	0	0.7	0	0	0.1	0.7
F.F.	0	0.7	0	0	0.1	0.7	4.3	5.0	5.0	0	5.0	0	0	0.7	0	0	0.1	0.7

REF. NO.	Q6013			Q6014			Q6015			Q6016			Q6017			Q6018		
MODE	E	C	B	E	C	B	E	C	B	E	C	B	E	C	B	E	C	B
STOP	0	5.0	0	0	0	0.6	0	0.7	0	0	0.1	0.7	0	9.9	0	0	9.9	0
PLAY	4.3	5.0	5.0	0	5.0	0	0	0.7	0	0	0.1	0.7	0	9.9	0	0	9.9	0
F.F.	4.3	5.0	5.0	0	5.0	0	0	0.7	0	0	0.1	0.7	0	9.9	0	0	9.9	0

REF. NO.	QR6012			QR6013			QR6015			QR6016								
MODE	E	C	B	E	C	B	E	C	B	E	C	B						
STOP	5.0	4.9	0.1	5.0	0.1	4.9	0	3.8	0	0	0	3.8						
PLAY	5.0	4.9	0.1	5.0	0.1	4.9	0	2.1	2.8	0	3.1	3.4						
F.F.	5.0	4.9	0.1	5.0	0.1	4.9	0	3.8	3.1	0	4.7	3.8						

SYSTEM CONTROL C.B.A. (VEP06564B)

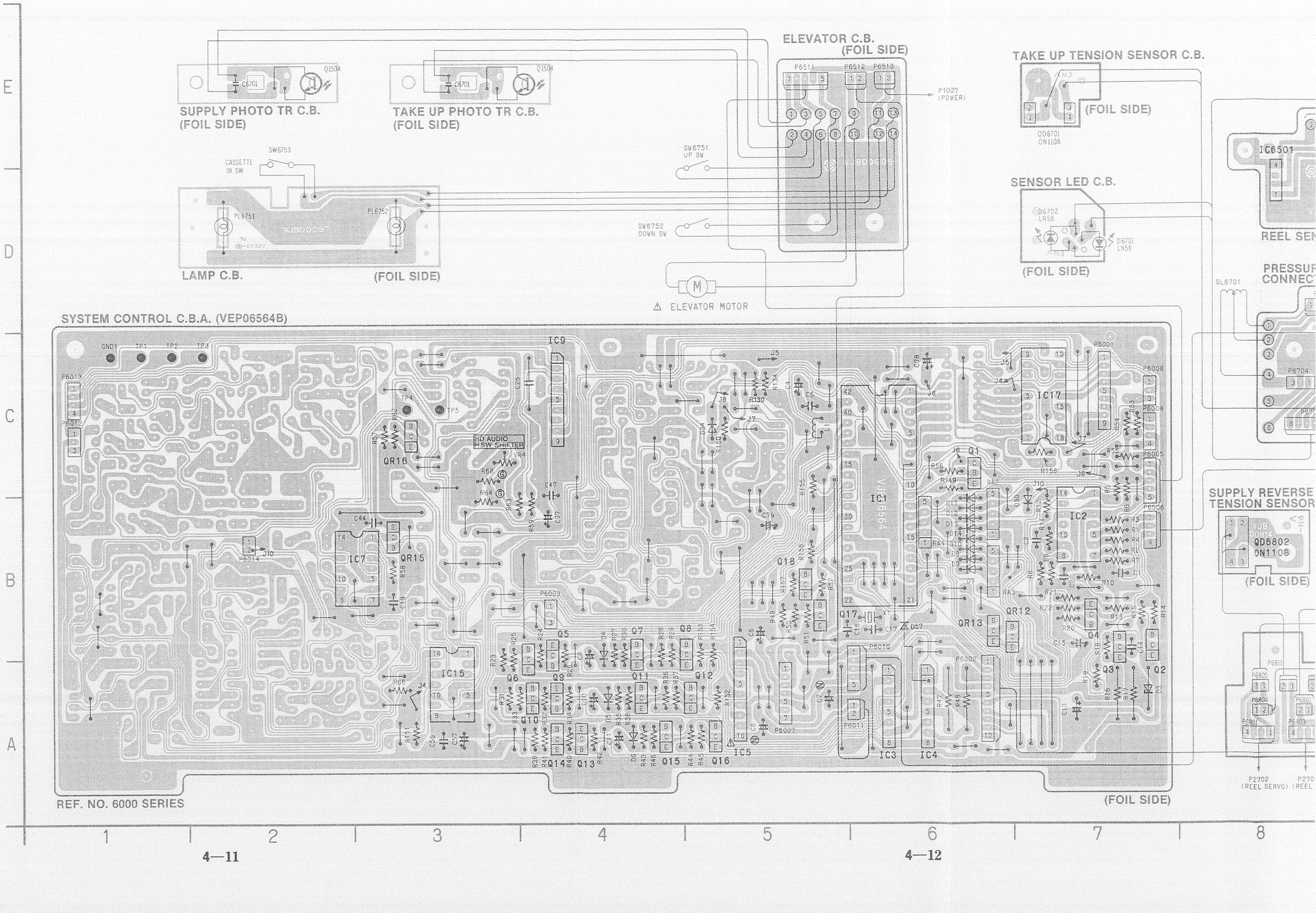

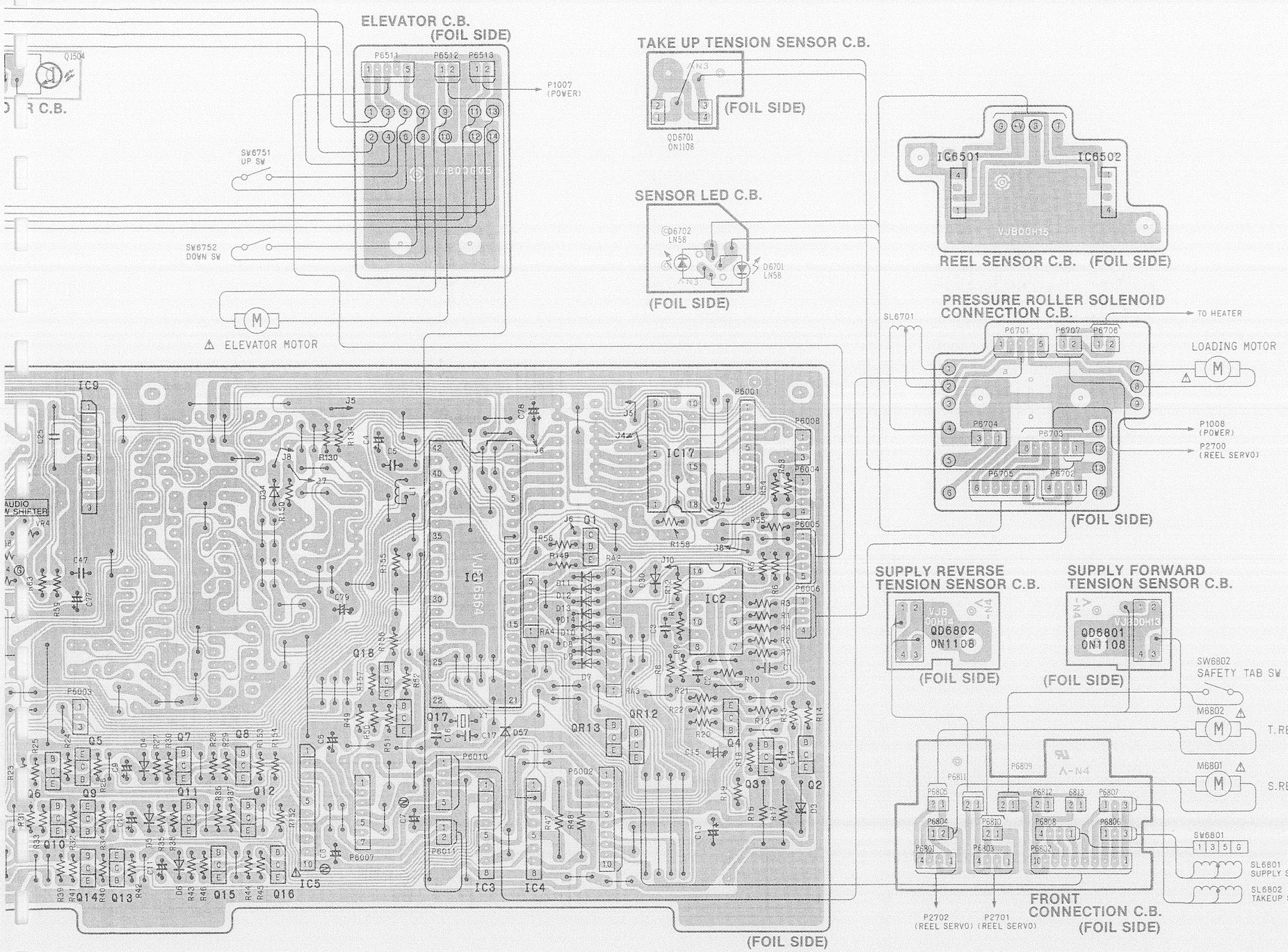

SYSTEM CONTROL C.B.A.	
Transister	
Q6001	C-6
Q6002	B-7
Q6003	B-7
Q6004	B-7
Q6005	B-4
Q6006	B-4
Q6007	B-4
Q6008	B-5
Q6009	A-4
Q6010	A-4
Q6011	A-4
Q6012	A-5
Q6013	A-4
Q6014	A-4
Q6015	A-4
Q6016	A-5
Q6017	B-5
Q6018	B-5
Transistor & Resistor	
QR6012	B-6
QR6013	B-6
QR6015	B-3
QR6016	C-3
Integrated Circuit	
IC6001	C-6
IC6002	B-7
IC6003	A-6
IC6004	A-6
IC6005	A-5
IC6007	B-3
IC6009	C-4
IC6015	A-3
IC6017	C-7
Test Point	
TP6001	C-1
TP6002	C-1
TP6003	C-2
TP6004	C-3
TP6005	C-3
GND1	C-1
Adjustment	
VR6004	C-3
Connector	
P6001	C-7
P6002	A-6
P6003	B-4
P6004	C-7
P6005	C-7
P6006	B-7
P6007	A-5
P6008	C-7
P6010	A-6
P6011	A-6
P6012	C-1
P6013	C-1
P6014	B-2

ADDRESS INFORMATION

INTERFACE SCHEMATIC DIAGRAM

IMPORTANT SAFETY NOTICE:
COMPONENTS IDENTIFIED WITH THE MARK
WHEN REPLACING ANY OF THESE COMPONE

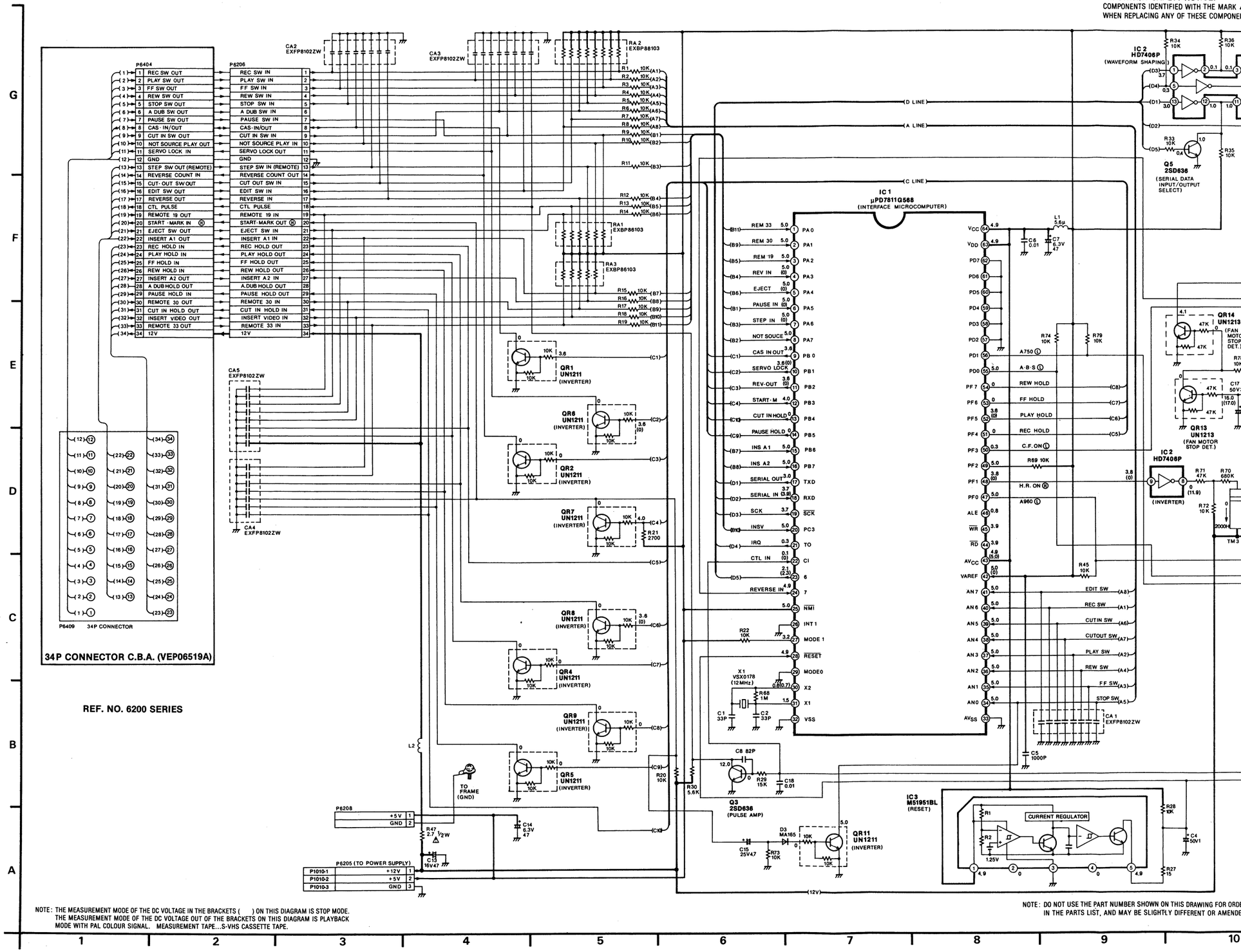

NOTE: THE MEASUREMENT MODE OF THE DC VOLTAGE IN THE BRACKETS ( ) ON THIS DIAGRAM IS STOP MODE.
THE MEASUREMENT MODE OF THE DC VOLTAGE OUT OF THE BRACKETS ON THIS DIAGRAM IS PLAYBACK MODE WITH PAL COLOUR SIGNAL. MEASUREMENT TAPE...S-VHS CASSETTE TAPE.

NOTE: DO NOT USE THE PART NUMBER SHOWN ON THIS DRAWING FOR ORDE
IN THE PARTS LIST, AND MAY BE SLIGHTLY DIFFERENT OR AMENDE

IMPORTANT SAFETY NOTICE:
COMPONENTS IDENTIFIED WITH THE MARK ⚠ HAVE THE SPECIAL CHARACTERISTICS FOR SAFETY.
WHEN REPLACING ANY OF THESE COMPONENTS, USE ONLY THE SAME TYPE.

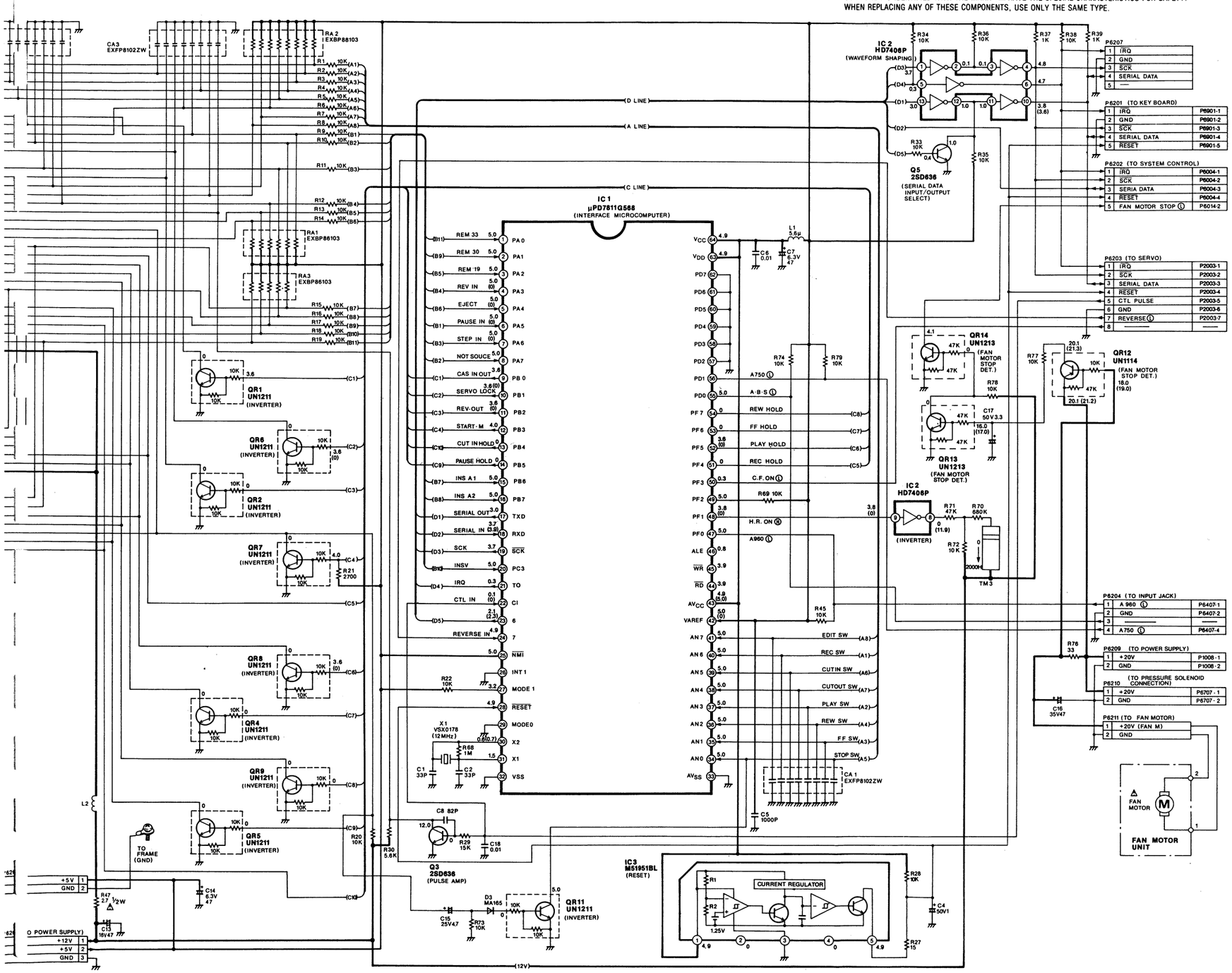

NOTE: DO NOT USE THE PART NUMBER SHOWN ON THIS DRAWING FOR ORDERING. THE CORRECT PART NUMBER IS SHOWN IN THE PARTS LIST, AND MAY BE SLIGHTLY DIFFERENT OR AMENDED SINCE THIS DRAWING WAS PREPARED.

INTERFACE C.B.A. (VEP06518B)

INTERFACE C.B.A. (VEP06518B)

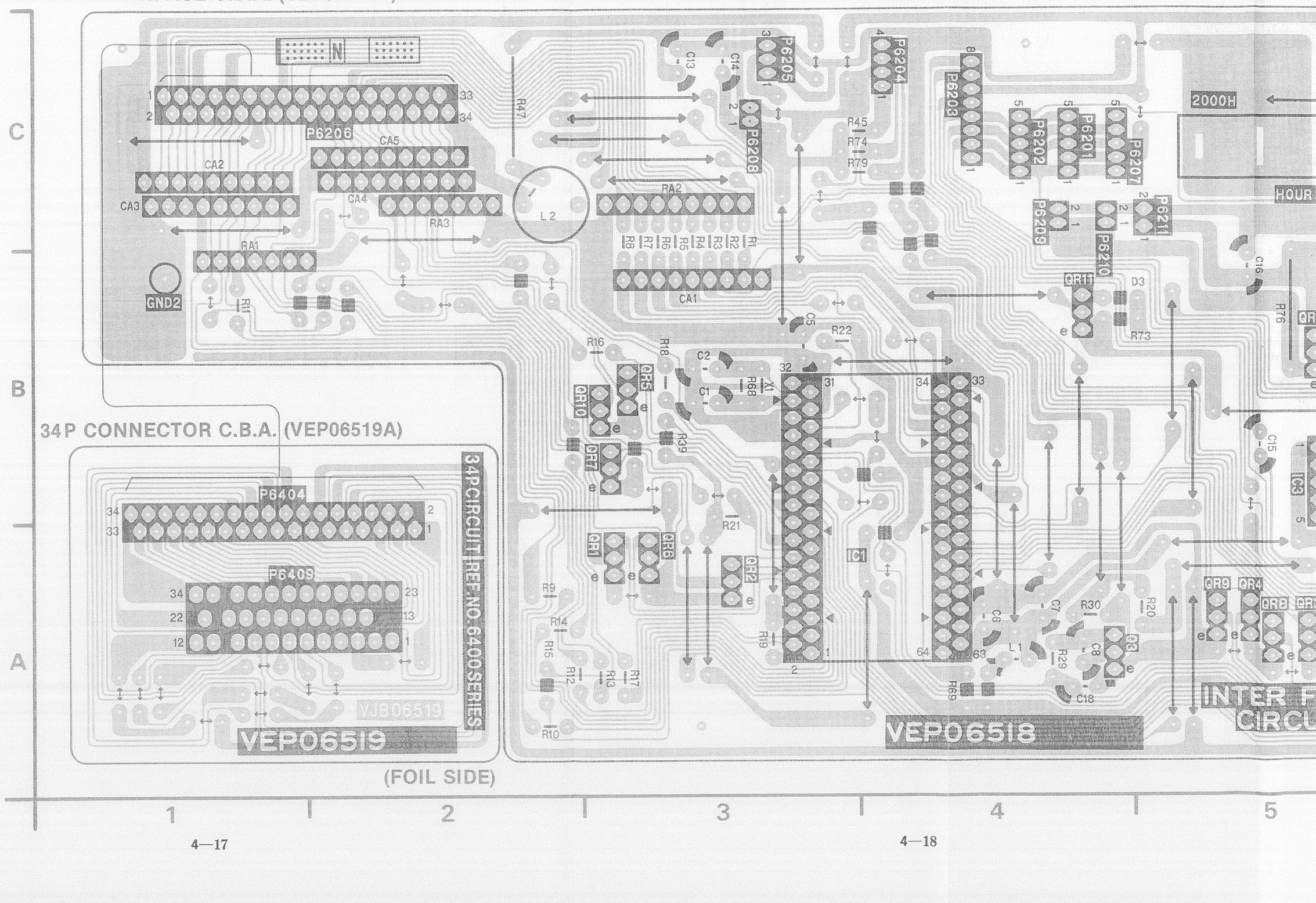

REF. NO. 6200 SERIES

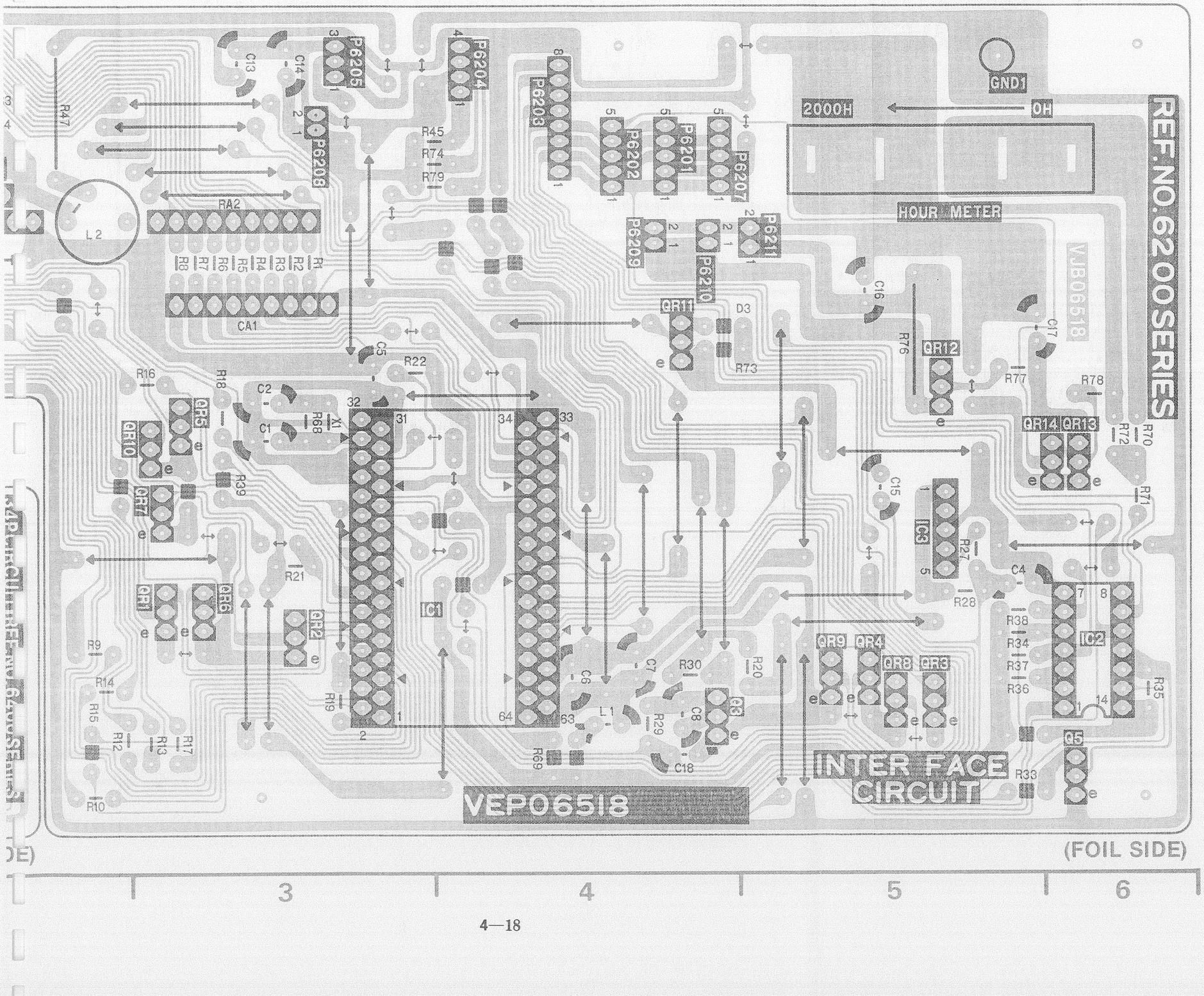

INTERFACE & 34P CONNECTOR C.B.A.	
Transistor	
Q6203	A-4
Q6205	A-6
Transistor & Resistor	
QR6201	A-3
QR6202	A-3
QR6204	A-5
QR6205	B-3
QR6206	A-3
QR6207	B-3
QR6208	A-5
QR6209	A-5
QR6211	B-4
QR6212	B-5
QR6213	B-6
QR6214	B-6
Integrated Circuit	
IC6201	A-3
IC6202	A-6
IC6203	B-5
Connector	
P6201	C-4
P6202	C-4
P6203	C-4
P6204	C-4
P6205	C-3
P6206	C-2
P6207	C-4
P6208	C-3
P6209	C-4
P6210	B-4
P6211	C-5
P6404	B-1
P6409	A-1

ADDRASS INFORMATION

SERVO C.B.A. (VEP02347A)

SERVO C.B.A. (VEP02347A)

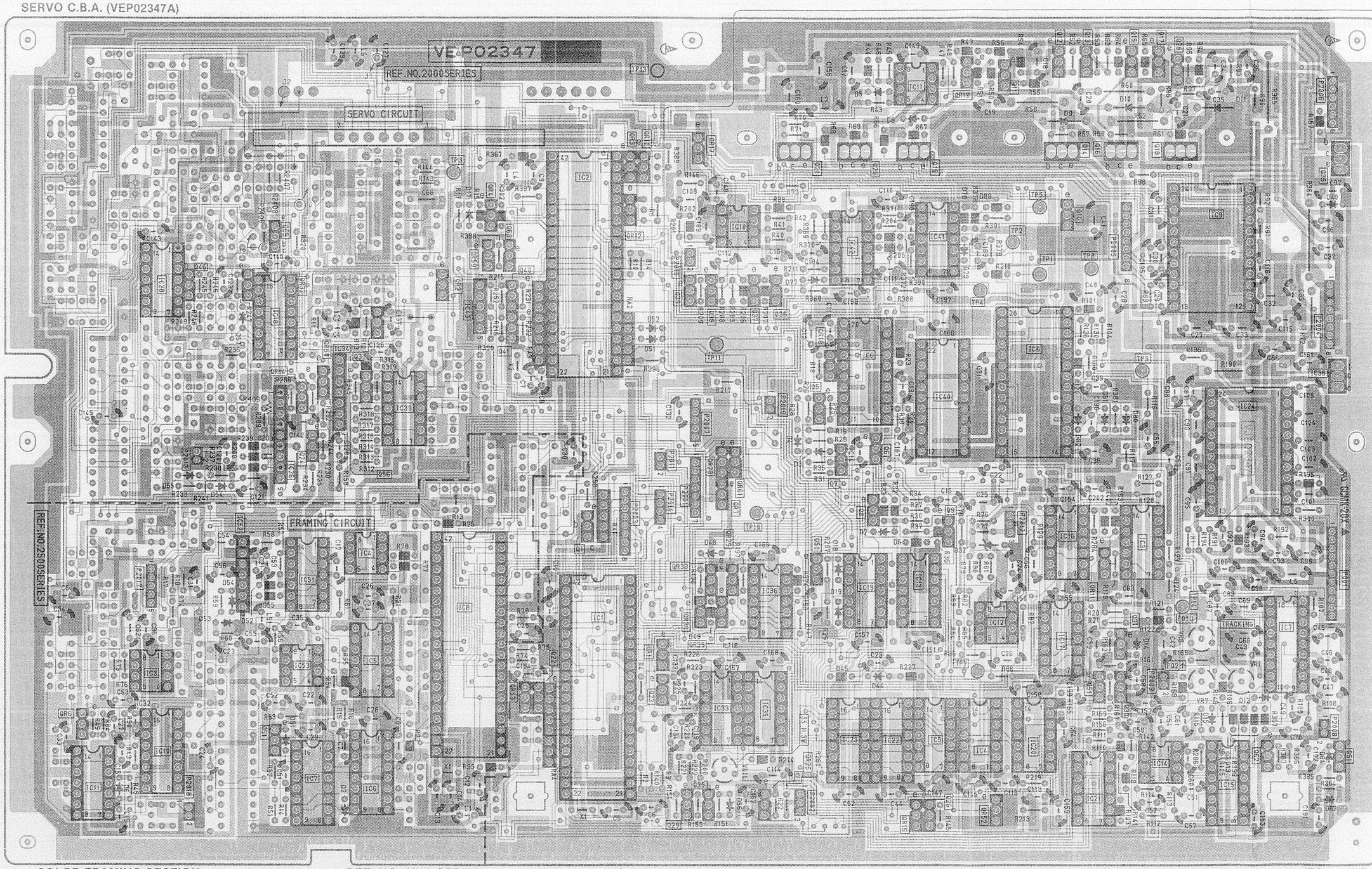

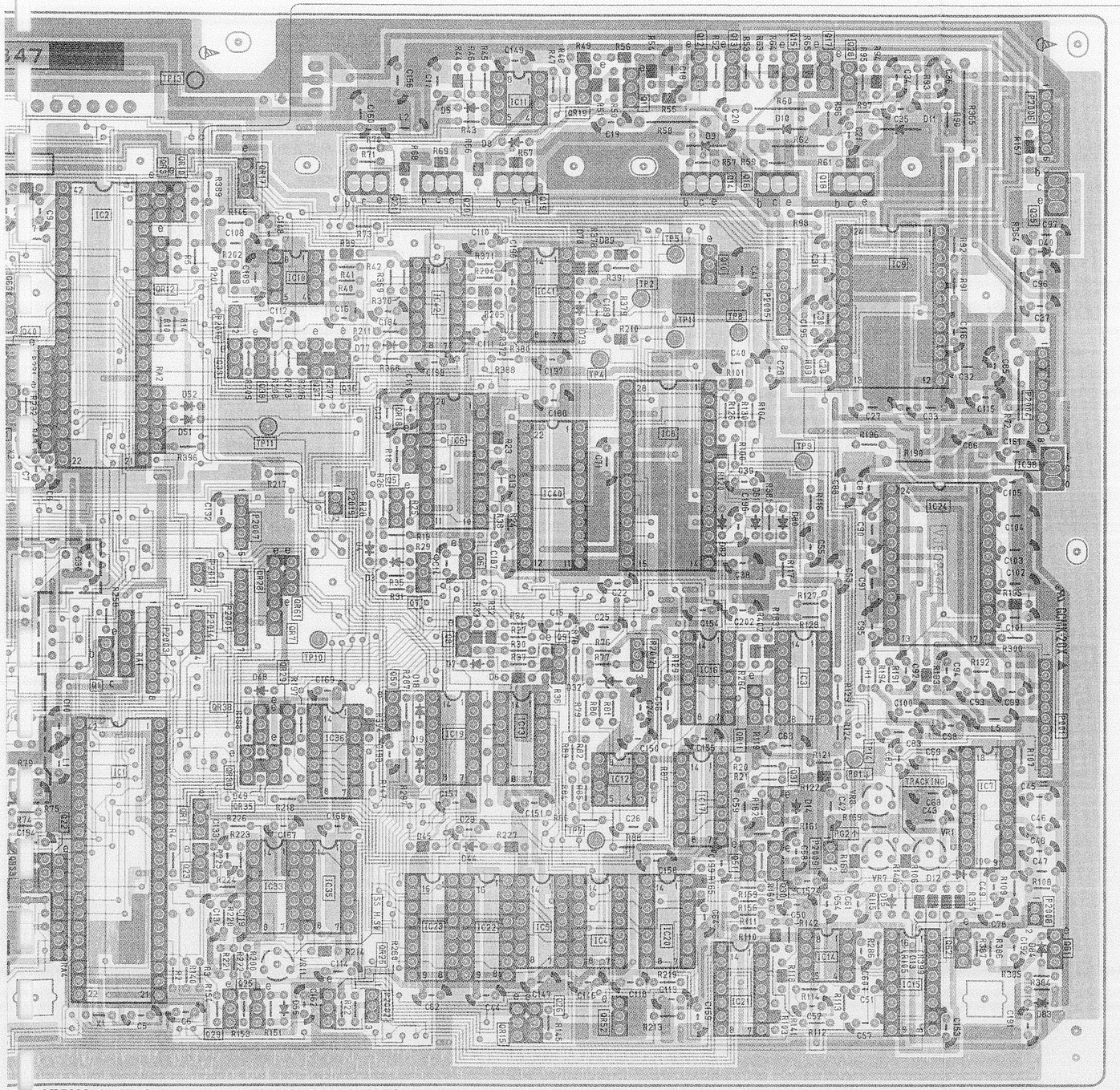

SERVO SECTION REF. NO. 2000 SERIES (FOIL SIDE)

CAP OVERRIDE C.B.A.
(VEP00L97A)

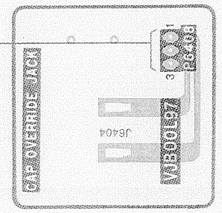

(FOIL SIDE)

FRAMING PACK (2) C.B.A. (VEP00G61A) REF. NO. 200SERIES (FOIL SIDE)

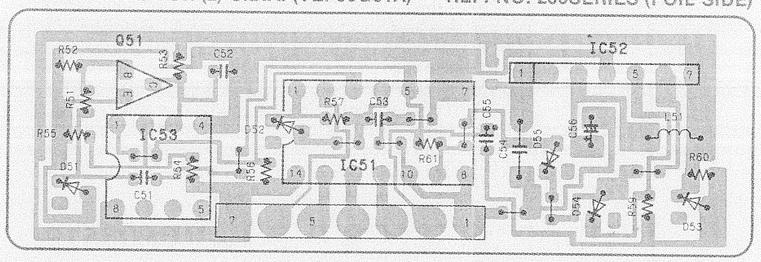

SERVO C.B.A. (Servo Sec.), FRAMING PACK (2) & CAP OVERRIDE C.B.A.	
Transistor	
Q251	D-10
Q2001	C-4
Q2003	D-3
Q2005	D-6
Q2006	C-6
Q2007	C-6
Q2008	C-6
Q2009	C-6
Q2010	E-7
Q2011	E-7
Q2012	F-7
Q2013	F-7
Q2014	E-7
Q2015	F-7
Q2016	E-7
Q2017	F-7
Q2018	E-8
Q2019	E-6
Q2020	E-6
Q2021	E-6
Q2022	B-4
Q2023	B-5
Q2024	C-3
Q2025	A-5
Q2026	A-6
Q2028	F-8
Q2029	A-5
Q2030	B-7
Q2031	B-7
Q2035	E-9
Q2036	D-5
Q2037	D-5
Q2038	D-5
Q2039	D-5
Q2040	D-4
Q2041	D-4
Q2046	D-2
Q2050	C-6
Q2051	B-7
Q2056	C-3
Q2061	A-9
Q2062	A-8
Q2063	D-4
Q2065	E-2
Transistor & Resistor	
QR2001	B-5
QR2002	D-3
QR2003	E-4
QR2004	E-4
QR2007	C-5
QR2010	E-5
QR2011	B-7
QR2012	D-4
QR2014	D-2
QR2015	A-6
QR2017	E-5
QR2018	D-6
QR2019	E-6
QR2025	A-5
QR2028	C-5
QR2029	B-5
QR2030	C-5
QR2032	D-3
QR2035	B-5
QR2038	C-5
QR2050	D-3
QR2052	A-7
QR2053	B-4
QR2059	D-4
QR2061	C-5
Integrated Circuit	
IC251	C-10
IC252	D-11
IC253	C-10
IC2001	B-4
IC2002	E-4
IC2003	C-7
IC2004	A-7
IC2005	B-6
IC2006	D-6
IC2007	B-8
IC2008	D-8
IC2009	E-8
IC2010	E-8
IC2011	E-6
IC2012	B-7
IC2013	B-6
IC2014	A-8
IC2015	A-8
IC2016	C-7
IC2017	B-7
IC2018	D-2
IC2019	B-6
IC2020	A-7
IC2021	A-7
IC2022	B-6
IC2023	B-6
IC2024	C-8
IC2026	C-2
IC2028	D-2
IC2033	B-5
IC2034	D-3
IC2035	B-5
IC2036	B-5
IC2038	D-9
IC2039	C-3
IC2040	D-6
IC2041	D-6
IC2042	D-6
IC2043	D-4
Test Point	
TP2001	D-8
TP2002	E-7
TP2003	E-3
TP2004	D-7
TP2005	D-7
TP2007	B-6
TP2008	D-8
TP2009	D-7
TP2010	C-5
TP2011	D-5
TP2013	E-5
TP2014	B-8
Adjustment	
VR2001	B-8
VR2007	B-8
VR2008	B-8
VR2011	A-5
Connector	
P001	B-9
P2001	C-5
P2002	A-6
P2003	C-4
P2004	D-9
P2005	D-7
P2006	E-9
P2007	C-5
P2008	A-9
P2009	B-8
P2010	D-5
P2011	C-5
P2012	C-7
P2013	C-2
P2014	C-5
P2019	C-5
P6408	E-11

ADDRESS INFORMATION

SERVO C.B.A. (Colour Framing Sec.)	
Transistor	
Q2551	B-2
Transistor & Resistor	
QR2506	B-1
Integrated Circuit	
IC2503	B-2
IC2504	C-3
IC2505	B-3
IC2506	A-3
IC2507	A-3
IC2508	B-3
IC2510	A-2
IC2511	A-1
IC2551	B-3
IC2552	C-2
IC2553	B-3
Connector	
P2017	B-2
P2018	A-2

ADDRESS INFORMATION

SERVO (2) & COLOUR FRAMING SCHEMATIC DIAGRAM

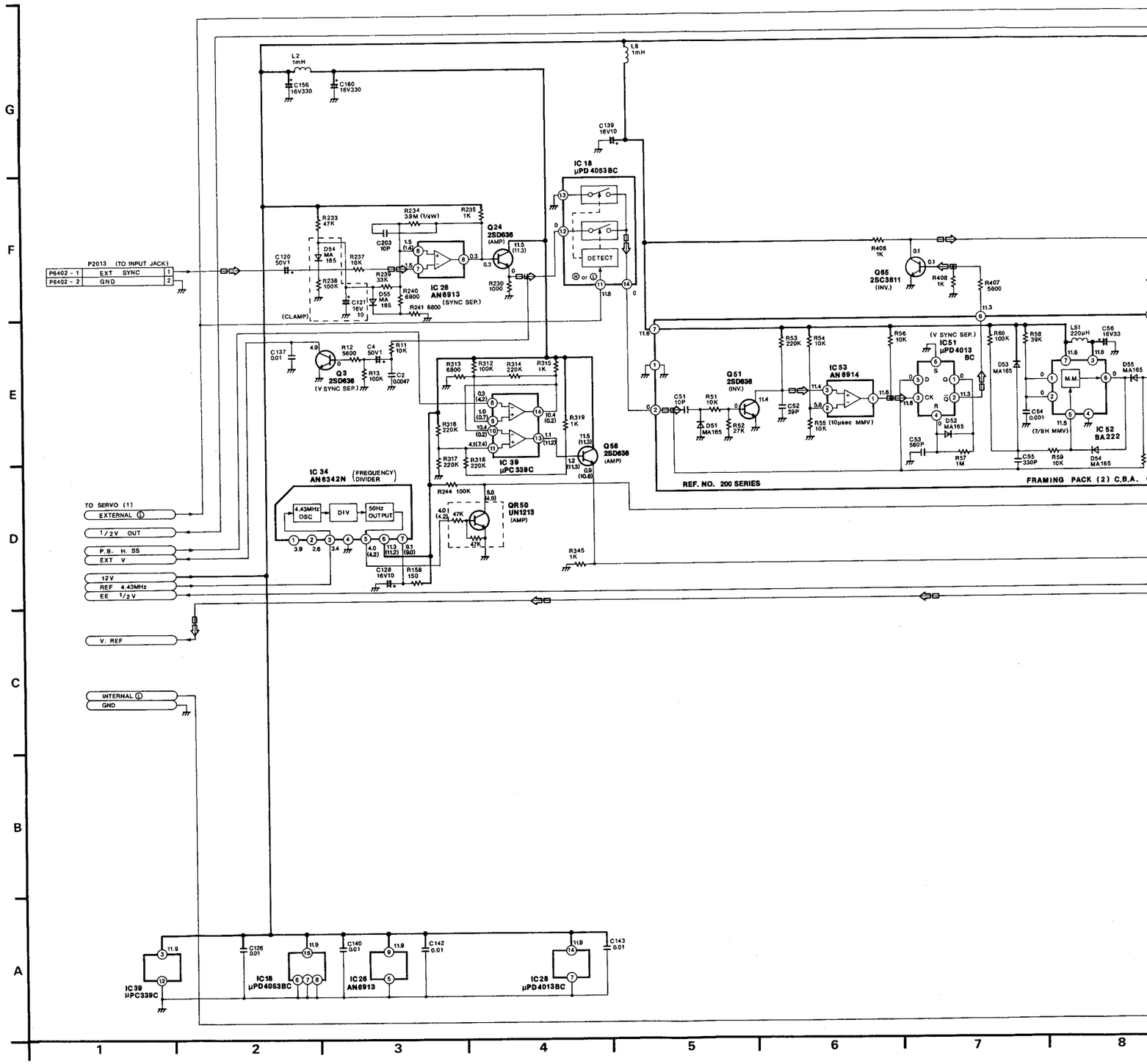

A M

CYLINDER PHASE CONTROL SIGNAL

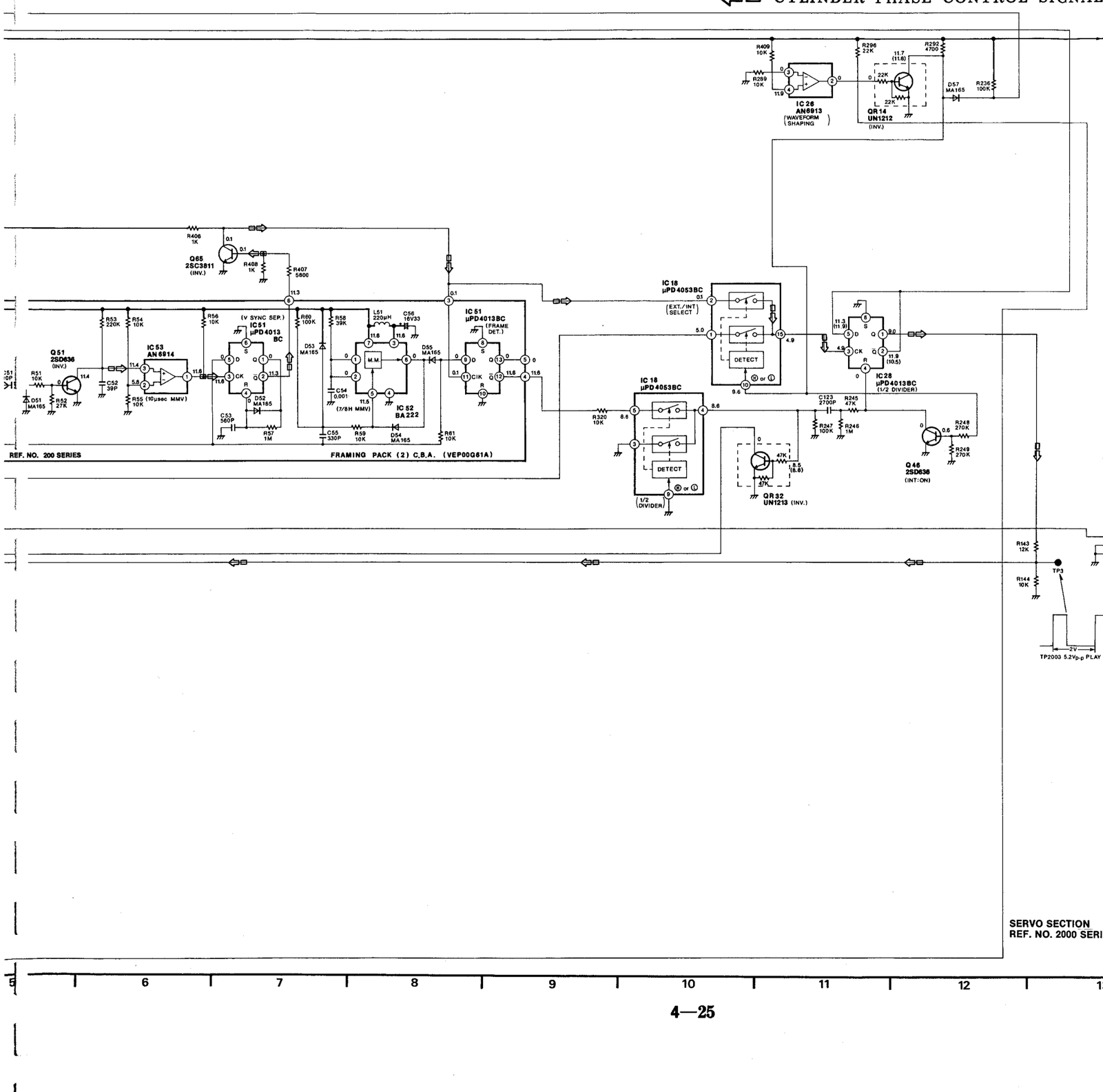

5 6 7 8 9 10 11 12 13 14 15 16 17

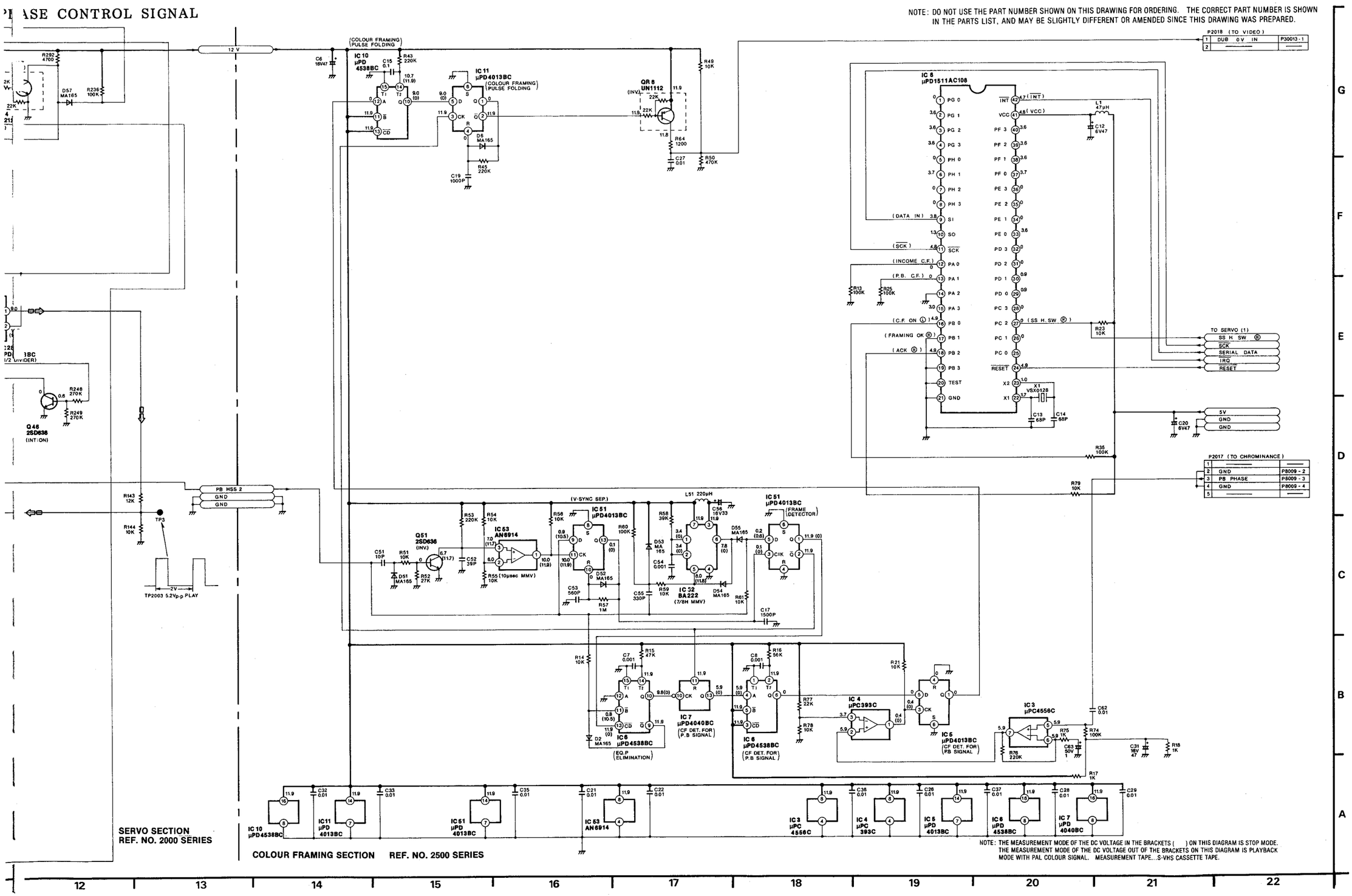
PHASE CONTROL SIGNAL
NOTE: DO NOT USE THE PART NUMBER SHOWN ON THIS DRAWING FOR ORDERING. THE CORRECT PART NUMBER IS SHOWN IN THE PARTS LIST, AND MAY BE SLIGHTLY DIFFERENT OR AMENDED SINCE THIS DRAWING WAS PREPARED.
P2018 (TO VIDEO)
DUB 0V IN
P30013-1
IC 8 μPD1511AC108
TO SERVO (1)
SS H SW
SCK
SERIAL DATA
IRQ
RESET
5V
GND
P2017 (TO CHROMINANCE)
GND
PB PHASE
P8009-2
P8009-3
P8009-4
IC 10 μPD 4538BC
IC 11 μPD4013BC
QR 8 UN1112
IC 51 μPD4013BC
IC 53 AN6914
IC 52 BA222
IC 6 μPD4538BC
IC 7 μPD4040BC
IC 4 μPC393C
IC 5 μPD4013BC
IC 3 μPC4556C
Q46 2SD636
Q51 2SD636
TP2003 5.2Vp-p PLAY
SERVO SECTION
REF. NO. 2000 SERIES
COLOUR FRAMING SECTION REF. NO. 2500 SERIES
NOTE: THE MEASUREMENT MODE OF THE DC VOLTAGE IN THE BRACKETS ( ) ON THIS DIAGRAM IS STOP MODE. THE MEASUREMENT MODE OF THE DC VOLTAGE OUT OF THE BRACKETS ON THIS DIAGRAM IS PLAYBACK MODE WITH PAL COLOUR SIGNAL. MEASUREMENT TAPE...S-VHS CASSETTE TAPE.

SERVO (1) SCHEMATIC DIAGRAM

CYLINDER SERVO SPEED

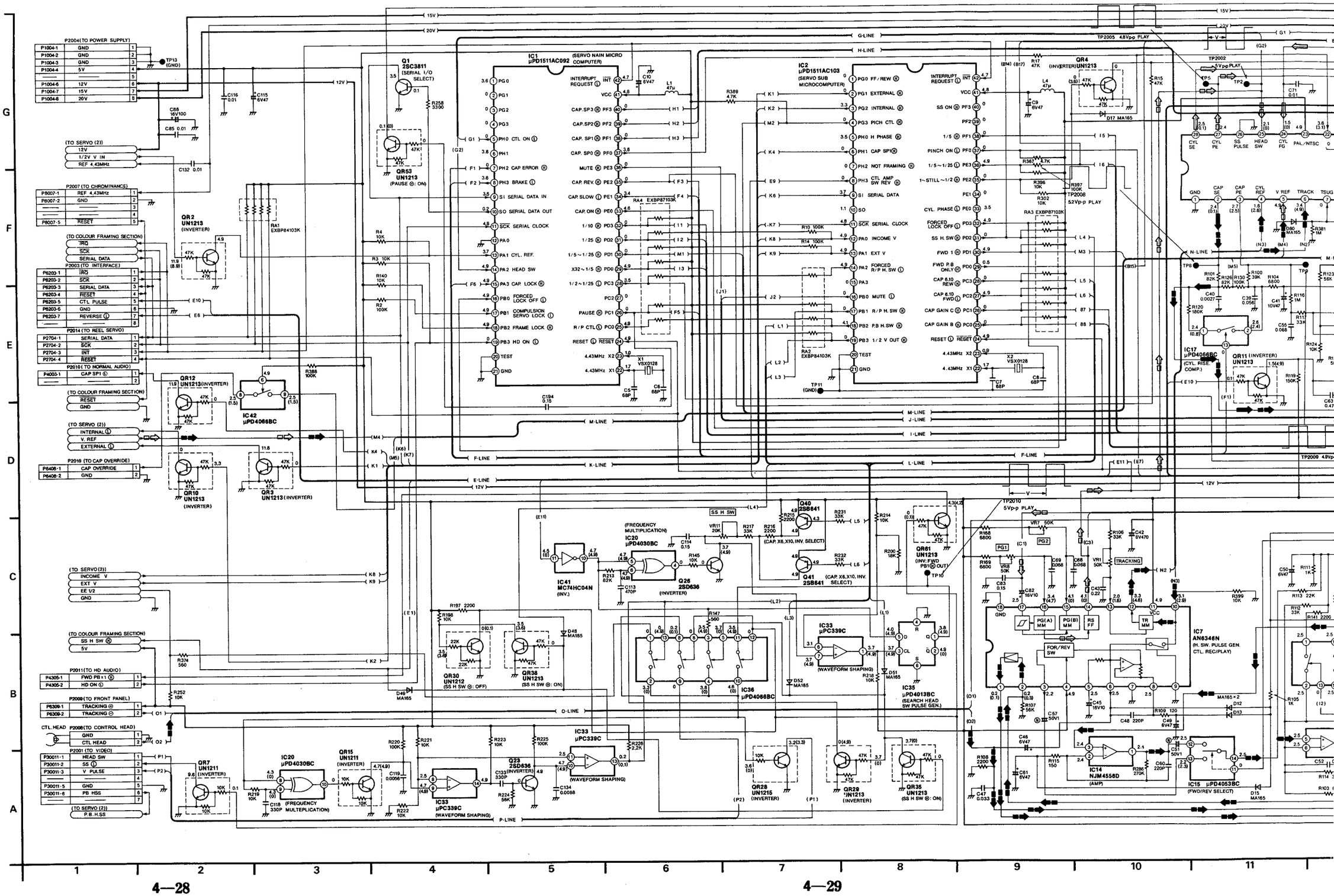

CYLINDER SERVO SPEED LOOP

CAPSTAN SERVO SPEED LOOP

CYLINDER SERVO PHASE LOOP

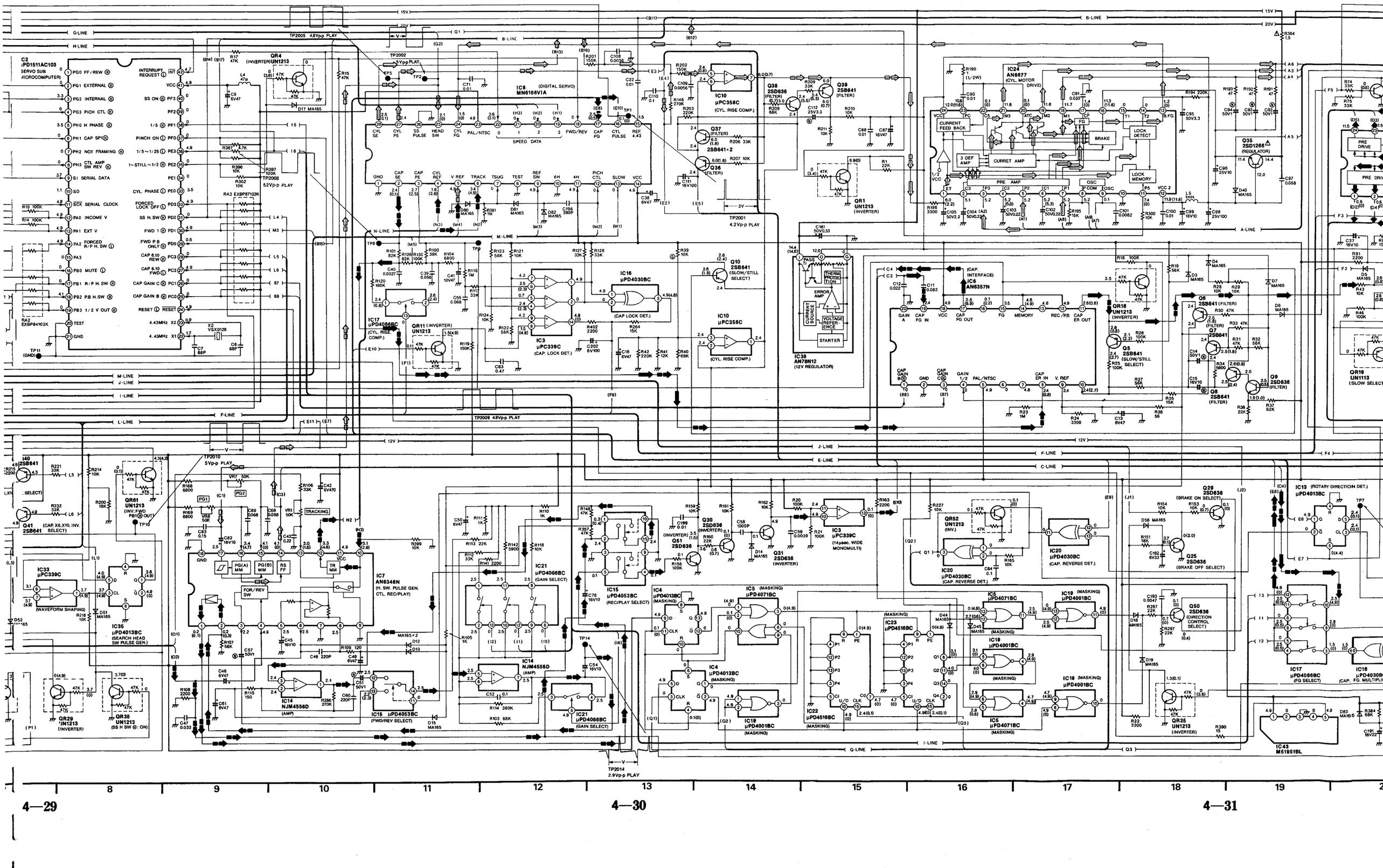

LOOP

CYLINDER SERVO PHASE LOOP

CAPSTAN SERVO PHASE LOOP

IMPORTANT SAFETY NOTICE:
COMPONENTS IDENTIFIED WITH THE MARK ⚠ HAVE THE SPECIAL CHARACTERISTICS FOR SAFETY.
WHEN REPLACING ANY OF THESE COMPONENTS, USE ONLY THE SAME TYPE.

REF. NO. 2000 SERIES

NOTE: THE MEASUREMENT MODE OF THE DC VOLTAGE IN THE BRACKETS ( ) ON THIS DIAGRAM IS STOP MODE.
THE MEASUREMENT MODE OF THE DC VOLTAGE OUT OF THE BRACKETS ON THIS DIAGRAM IS PLAYBACK MODE WITH PAL COLOUR SIGNAL. MEASUREMENT TAPE...S-VHS CASSETTE TAPE.

NOTE: DO NOT USE THE PART NUMBER SHOWN ON THIS DRAWING FOR ORDERING. THE CORRECT PART NUMBER IS SHOWN IN THE PARTS LIST, AND MAY BE SLIGHTLY DIFFERENT OR AMENDED SINCE THIS DRAWING WAS PREPARED.

REEL SERVO SCHEMATIC DIAGRAM

SPEED CONTROL SIGNAL (FF MODE)

TENSION CONTROL SIGNAL (FWD MODE)

NOTE: DO NOT USE THE PART NUMBER SHOWN ON THIS DRAWING FOR ORDERING. THE CORRECT PART NUMBER IS SHOWN IN THE PARTS LIST, AND MAY BE SLIGHTLY DIFFERENT OR AMENDED SINCE THIS DRAWING WAS PREPARED.

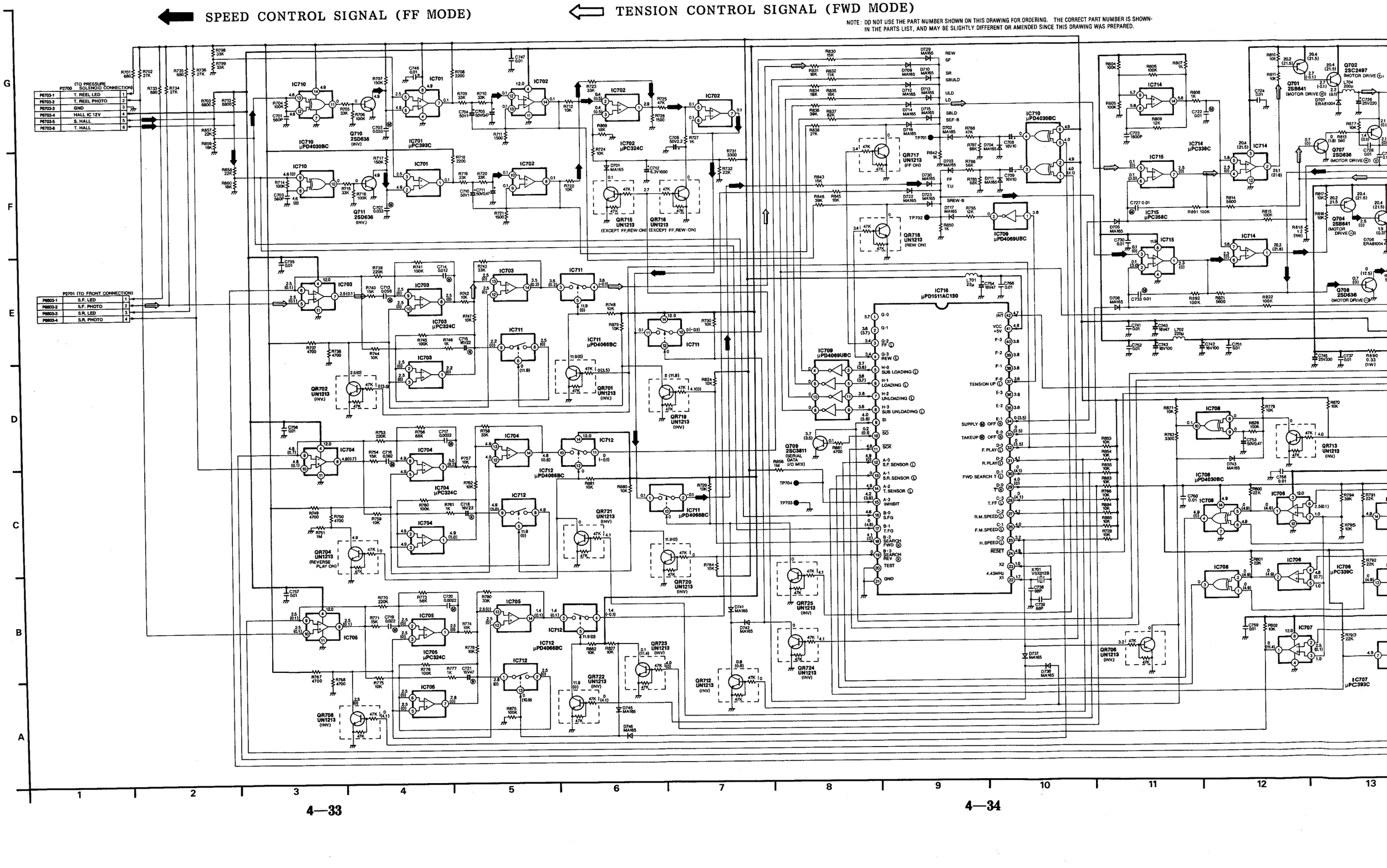

OWN ON THIS DRAWING FOR ORDERING. THE CORRECT PART NUMBER IS SHOWN
SLIGHTLY DIFFERENT OR AMENDED SINCE THIS DRAWING WAS PREPARED.

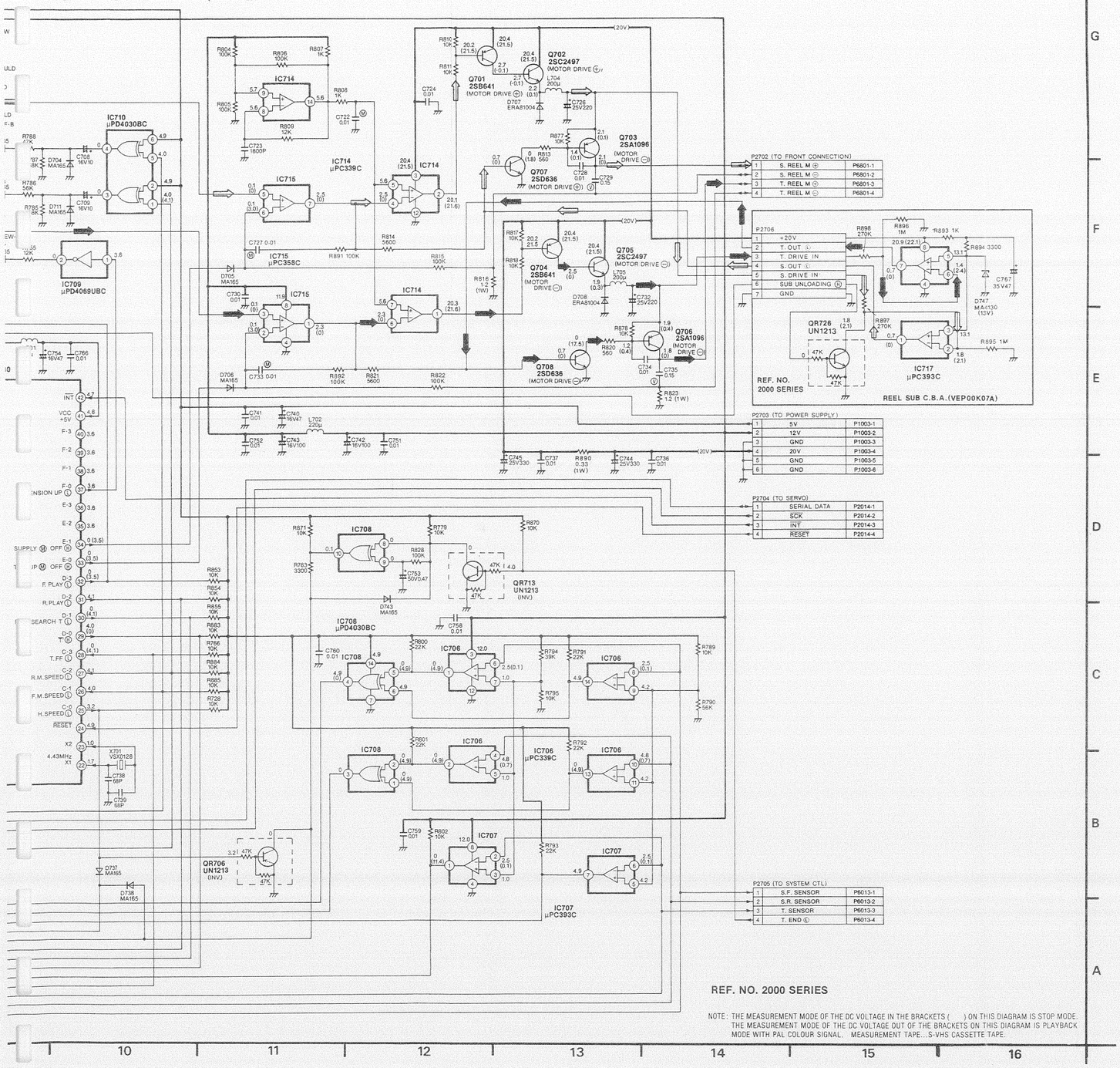

NOTE: THE MEASUREMENT MODE OF THE DC VOLTAGE IN THE BRACKETS ( ) ON THIS DIAGRAM IS STOP MODE.
THE MEASUREMENT MODE OF THE DC VOLTAGE OUT OF THE BRACKETS ON THIS DIAGRAM IS PLAYBACK MODE WITH PAL COLOUR SIGNAL. MEASUREMENT TAPE...S-VHS CASSETTE TAPE.

REEL SERVO C.B.A. (VEP02224E)

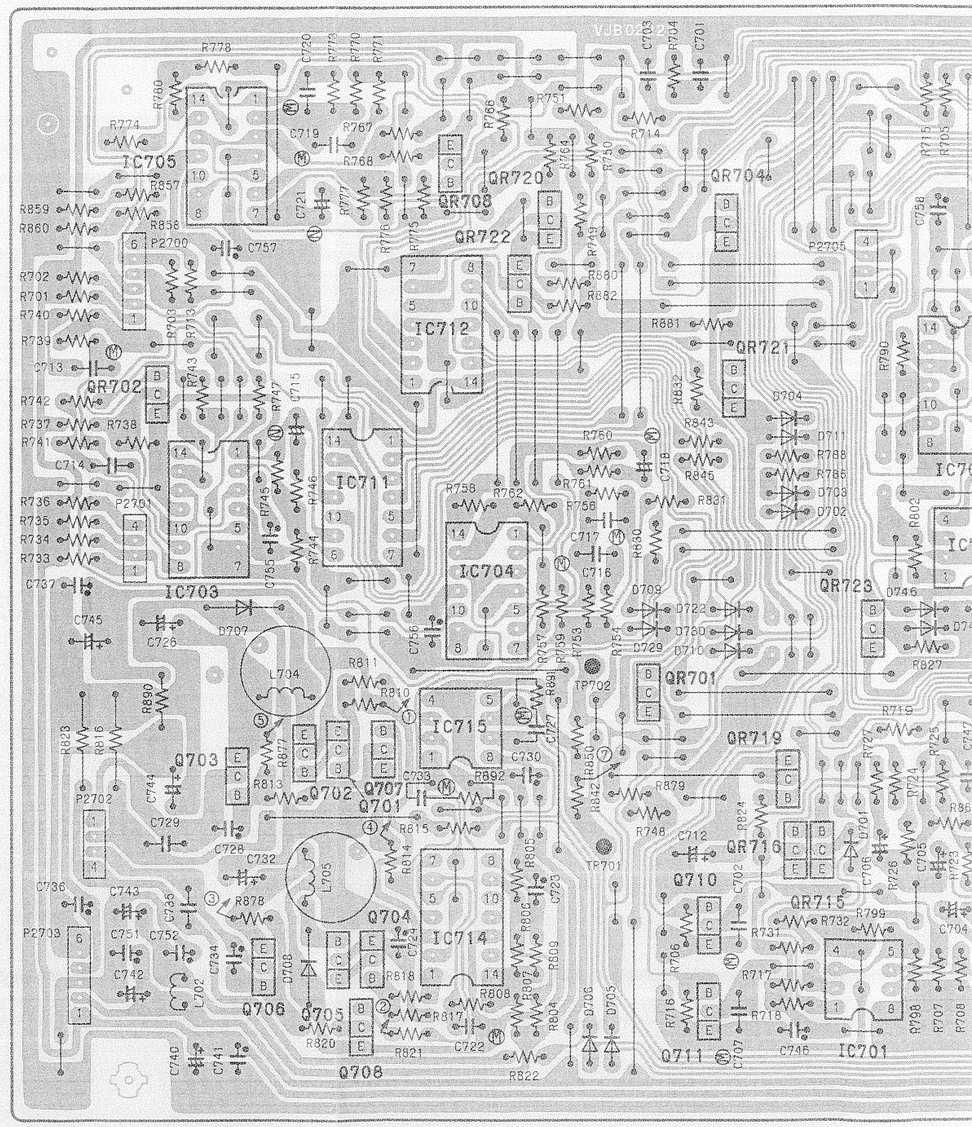

REEL SERVO C.B.A. (VEP02224E)

REEL SERVO C.B.A. (VEP02224E)

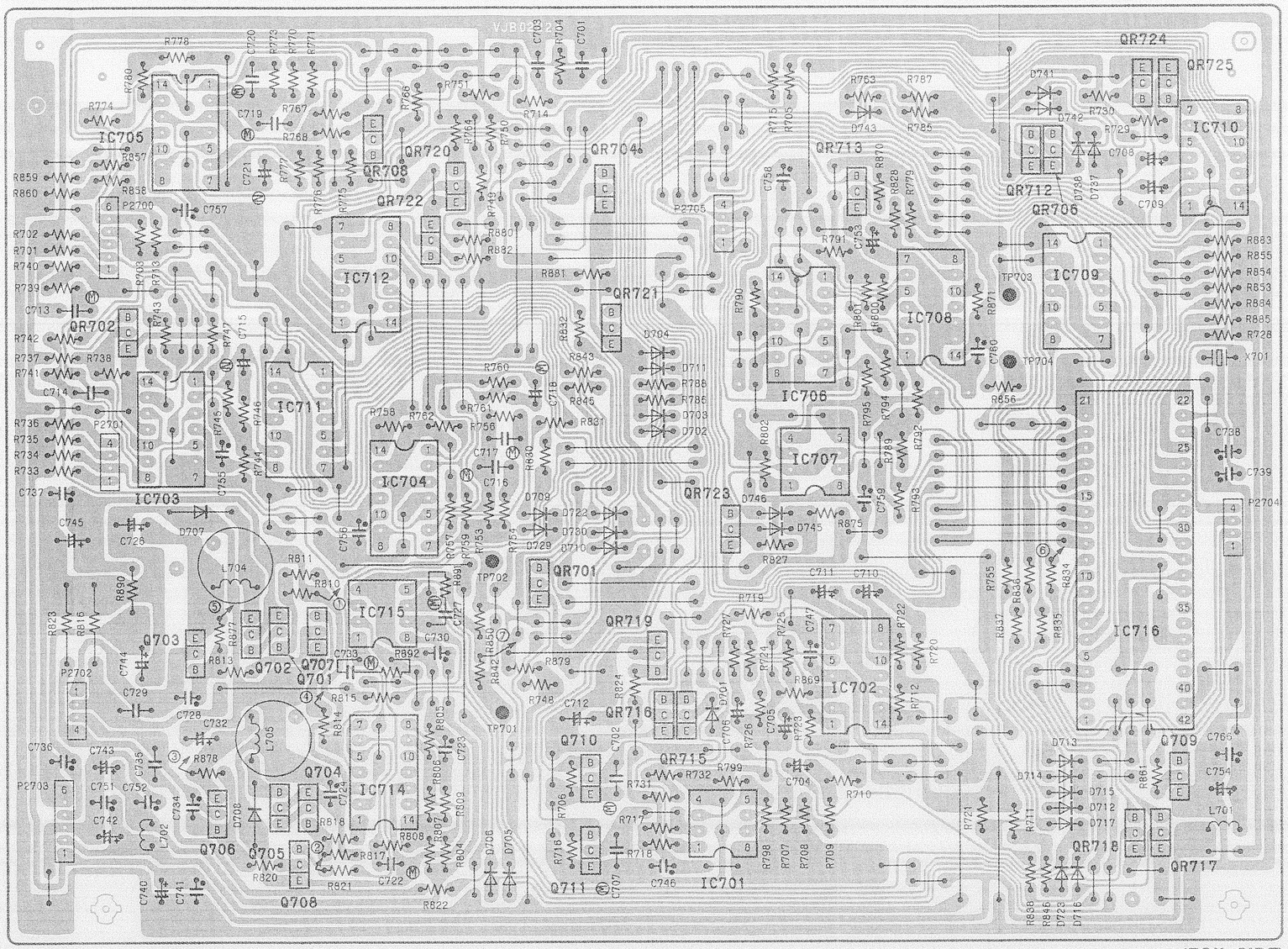

REF. NO. 2000 SERIES (FOIL SIDE)

REEL SUB C.B.A. (VEP00K07A)

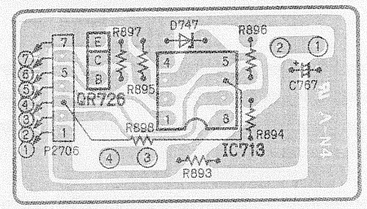

REF. NO. 2000 SERIES (FOIL SIDE)

REEL SERVO & REEL SUB C.B.A.	
Transistor	
Q2701	B-2
Q2702	B-2
Q2703	B-4
Q2704	A-2
Q2705	A-2
Q2706	A-2
Q2707	B-2
Q2708	A-2
Q2709	A-5
Q2710	A-3
Q2711	A-3
Transistor & Resistor	
QR2701	B-3
QR2702	C-1
QR2704	D-3
QR2706	D-5
QR2708	D-2
QR2712	D-5
QR2713	D-4
QR2715	B-3
QR2716	B-3
QR2717	A-5
QR2718	A-5
QR2719	B-3
QR2720	D-2
QR2721	C-3
QR2722	C-2
QR2723	B-4
QR2724	D-5
QR2725	D-5
QR2726	D-6
Integrated Circuit	
IC2701	A-3
IC2702	B-4
IC2703	C-1
IC2704	B-2
IC2705	D-1
IC2706	C-4
IC2707	C-4
IC2708	C-4
IC2709	C-5
IC2710	D-5
IC2711	C-2
IC2712	C-2
IC2713	D-6
IC2714	A-2
IC2715	B-2
IC2716	B-5
Test Point	
TP2701	B-3
TP2702	B-3
TP2703	C-5
TP2704	C-5
Connector	
P2700	D-1
P2701	C-1
P2702	B-1
P2703	A-1
P2704	B-5
P2705	D-3
P2706	D-6

ADDRESS INFORMATION

AM IS STOP MODE.
AM PLAYBACK

CHROMINANCE SCHEMATIC DIAGRAM

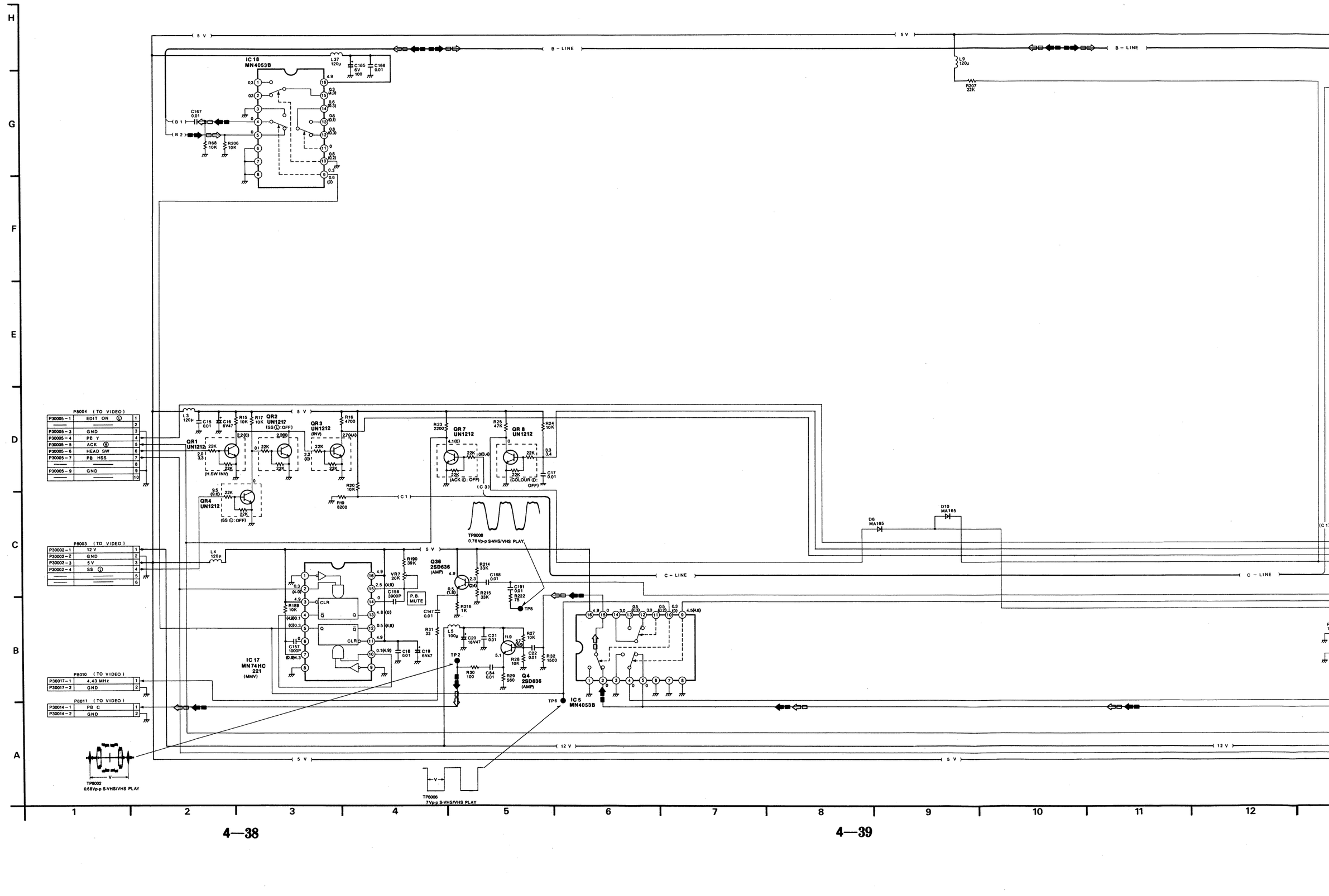

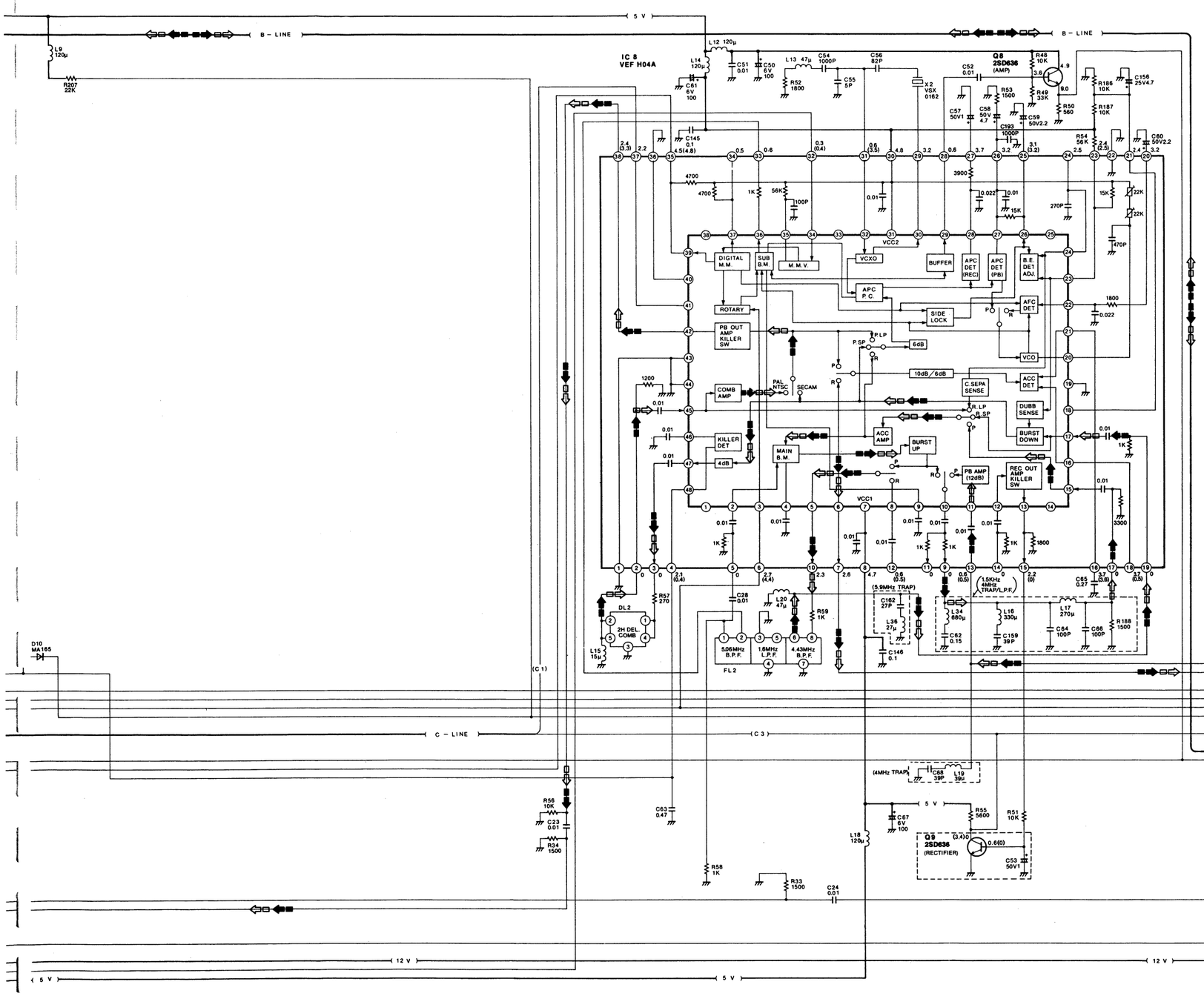

NOTE: THE MEA
THE MEA
MODE W

MAIN SIGNAL PATH IN PLAYBACK MODE (VHS)

MAIN SIGNAL PATH IN PLAYBACK MODE (S-VHS)

TPG1 TPG2 TPG3

P8005 (TO HEAD AMP)

1		
2		
3	GND	P5003 – 3
4	PB C IN	P5003 – 4

P8009 (TO SERVO)

1		
2	GND	P2017 – 2
3	PB PHASE	P2017 – 3
4	GND	P2017 – 4
5	ACK Ⓑ	P2017 – 5

P8008 (TO INPUT JACK)

1		
2		
3	GND	P6403 – 3
4	COLOUR Ⓛ	P6403 – 4
5	B / W Ⓛ	P6403 – 5

P8006 (TO OUTPUT JACK)

1	DUB H.SW OUT	P6506 – 1
2	DUB C OUT	P6506 – 2
3	GND	P6506 – 3

P8007 (TO SERVO)

1	REF 4.43MHz	P2007 – 1
2	GND	P2007 – 2
3		
4		
5		

REF. NO. 8000 SERIES

NOTE: THE MEASUREMENT MODE OF THE DC VOLTAGE IN THE BRACKETS ( ) ON THIS DIAGRAM IS STOP MODE. THE MEASUREMENT MODE OF THE DC VOLTAGE OUT OF THE BRACKETS ON THIS DIAGRAM IS PLAYBACK MODE WITH PAL COLOUR SIGNAL. MEASUREMENT TAPE...S-VHS CASSETTE TAPE.

NOTE: DO NOT USE THE PART NUMBER SHOWN ON THIS DRAWING FOR ORDERING. THE CORRECT PART NUMBER IS SHOWN IN THE PARTS LIST, AND MAY BE SLIGHTLY DIFFERENT OR AMENDED SINCE THIS DRAWING WAS PREPARED.

CHROMINANCE C.B.A. (VEP08132A)

CHROMINANCE C.B.A. (VEP08132A)

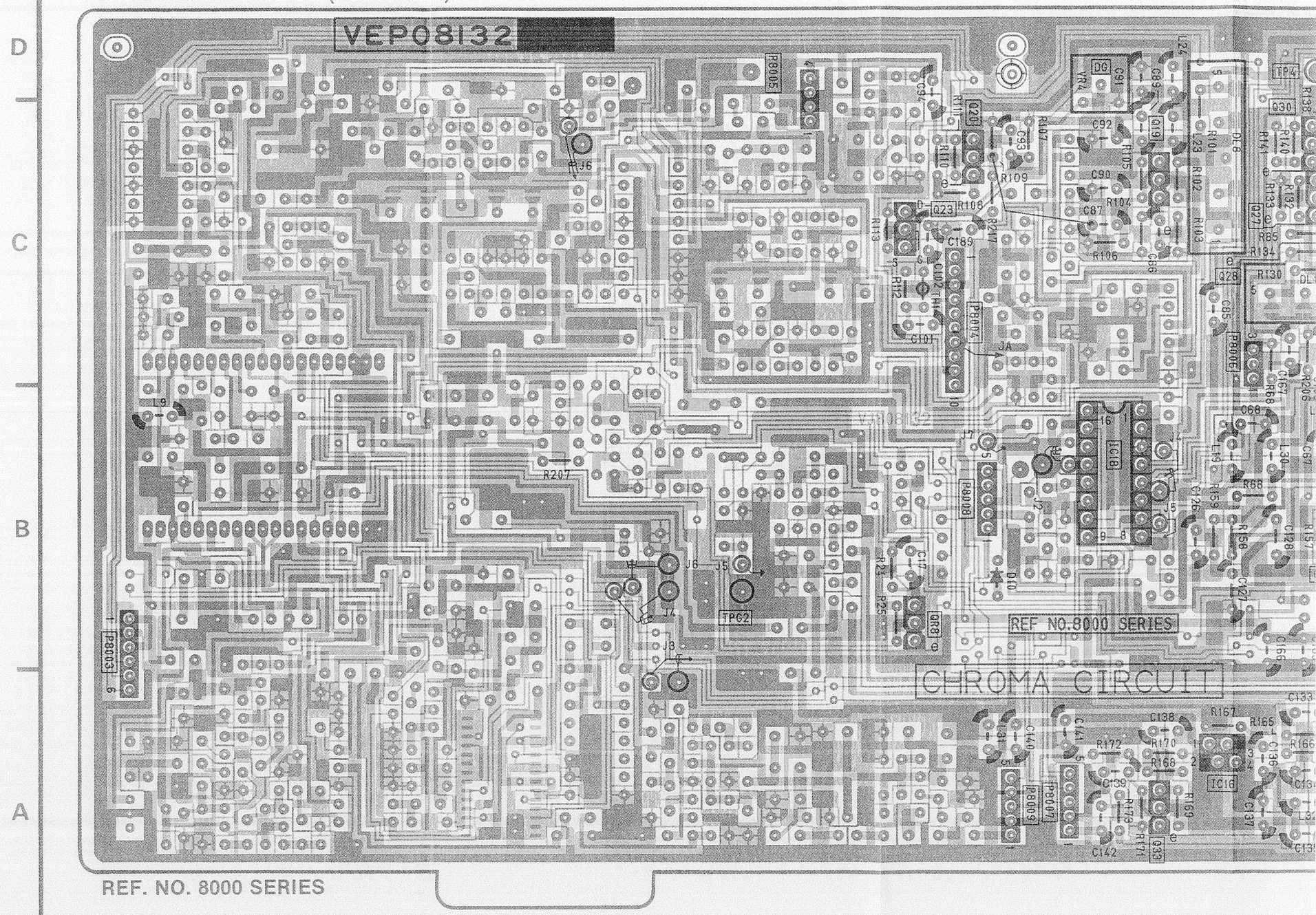

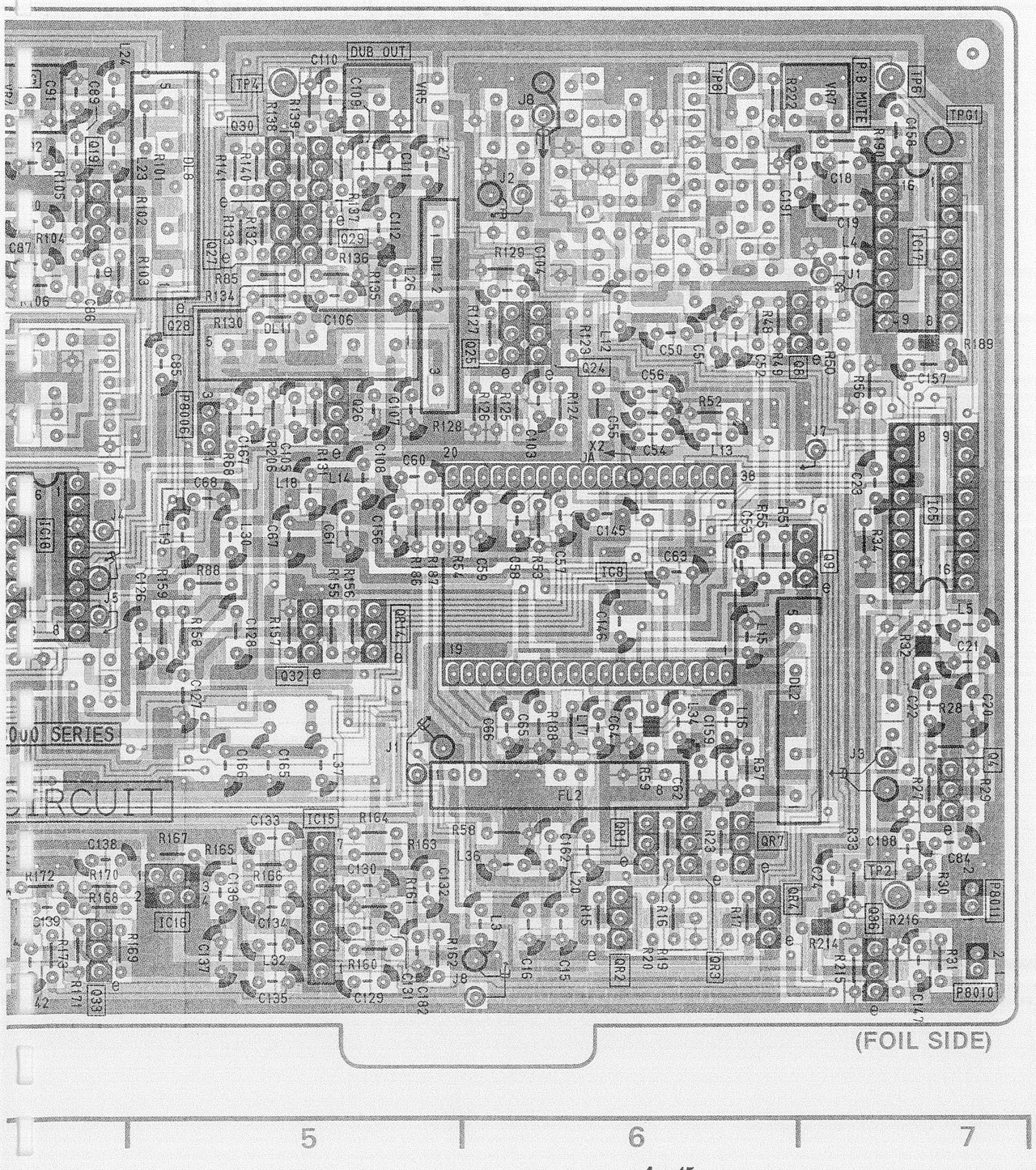

CHROMINANCE C.B.A.	
Transister	
Q8004	A-7
Q8008	C-7
Q8009	B-7
Q8019	C-4
Q8020	C-4
Q8023	C-4
Q8024	C-6
Q8025	C-6
Q8026	C-5
Q8027	C-5
Q8028	C-5
Q8029	C-5
Q8030	C-5
Q8032	B-5
Q8033	A-4
Q8036	A-7
Transistor & Resistor	
QR8001	A-6
QR8002	A-6
QR8003	A-6
QR8004	A-6
QR8007	A-6
QR8008	B-4
QR8014	B-5
Integrated Circuit	
IC8005	B-7
IC8008	B-6
IC8015	A-5
IC8016	A-5
IC8017	C-7
IC8018	B-4
Test Point	
TP8002	A-7
TP8004	D-5
TP8006	D-7
TP8008	D-6
TPG8001	C-7
TPG8002	B-3
Adjustment	
VR8004	D-4
VR8005	D-5
VR8007	D-7
Connector	
P8003	B-1
P8004	C-4
P8005	C-3
P8006	C-5
P8007	A-4
P8008	B-4
P8009	A-4
P8010	A-7
P8011	A-7

ADDRESS INFORMATION

VIDEO C.B.A. (VEP03662A)

VIDEO C.B.A. (VEP03662A)

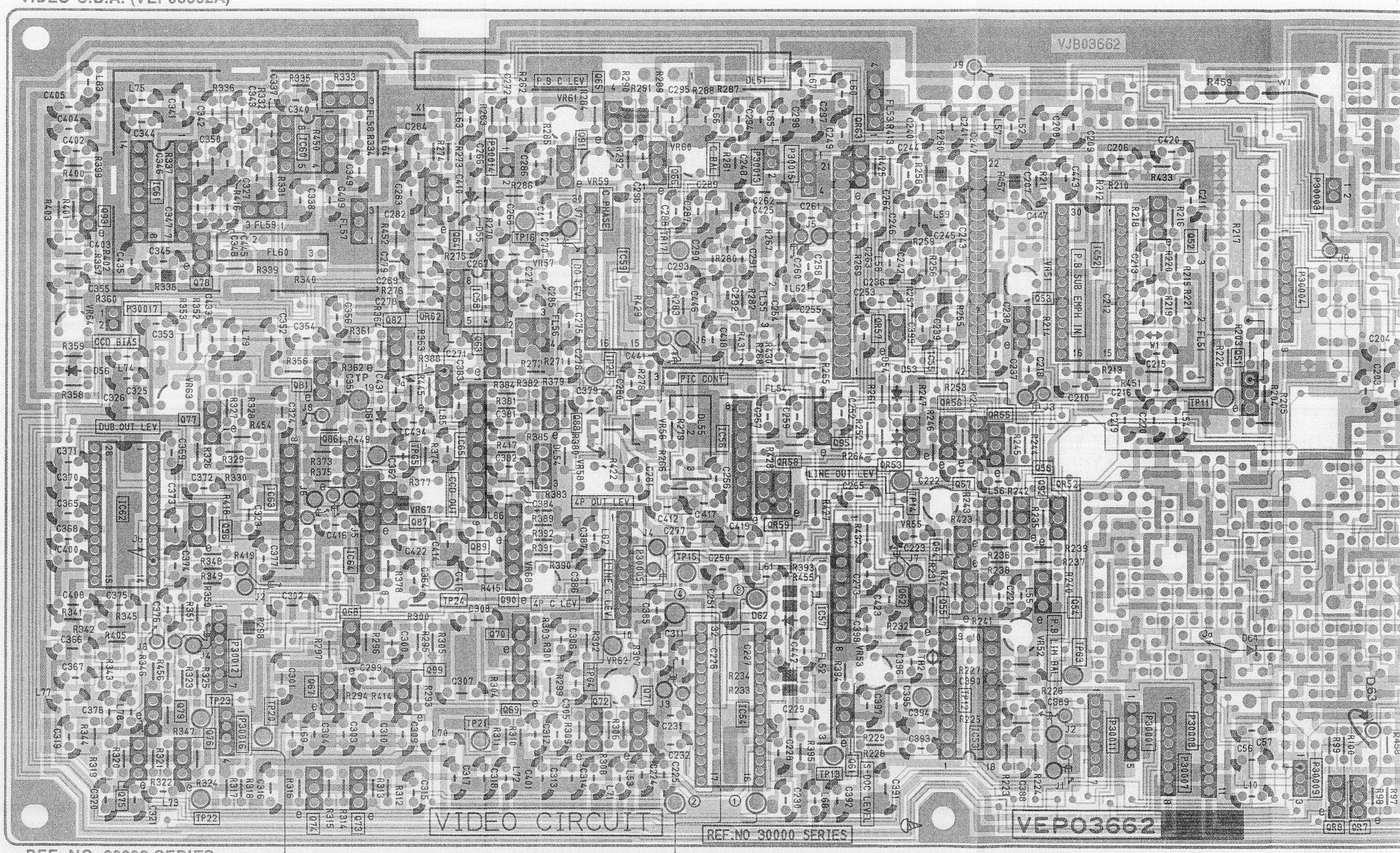

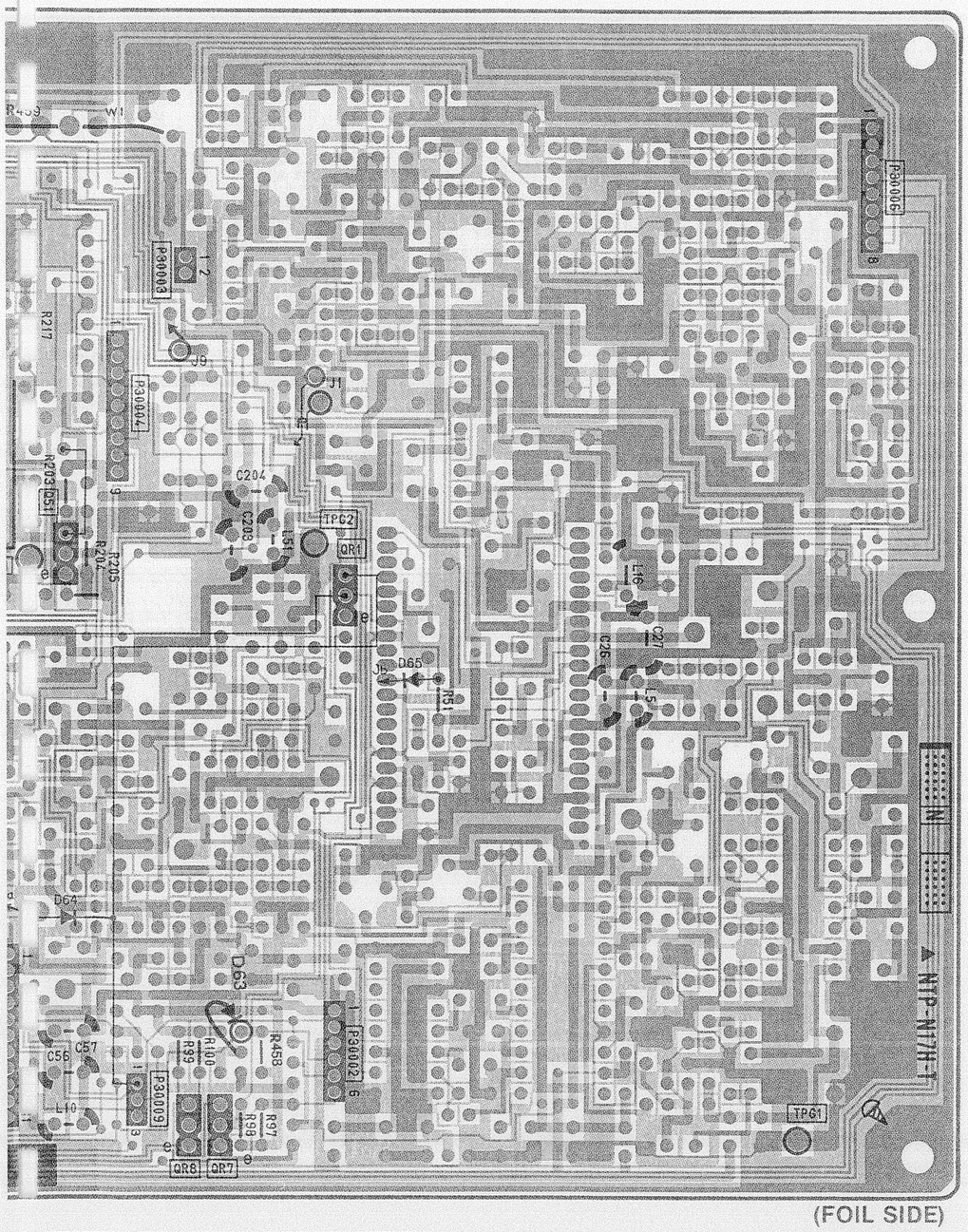

VIDEO SUB C.B.A. (VEP00N06A) REF. NO. 30000 SERIES

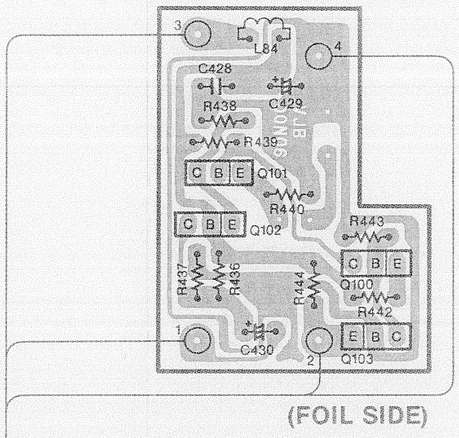

S-VIDEO OUTPUT C.B.A. (VEP00L94A)

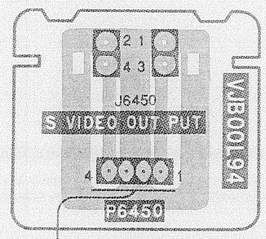

VIDEO, VIDEO SUB & S-VIDEO OUTPUT C.B.A.	
Transistor	
Q30051	C-6
Q30052	D-6
Q30053	C-5
Q30054	B-6
Q30055	B-5
Q30056	C-5
Q30057	B-5
Q30061	A-5
Q30062	B-5
Q30063	C-3
Q30064	D-3
Q30065	D-3
Q30066	D-4
Q30067	B-2
Q30068	B-2
Q30069	B-3
Q30070	B-3
Q30071	B-4
Q30072	B-3
Q30073	A-2
Q30074	A-2
Q30075	A-1
Q30076	A-2
Q30077	C-2
Q30078	C-2
Q30079	A-2
Q30081	C-2
Q30082	C-3
Q30086	C-2
Q30087	B-3
Q30088	C-3
Q30089	B-3
Q30090	B-3
Q30091	D-3
Q30092	B-5
Q30093	D-1
Q30094	B-5
Q30095	C-5
Q30096	B-2
Q30099	B-3
Q30100	B-10
Q30101	C-10
Q30102	B-10
Q30103	B-10
Transistor & Resistor	
QR30001	C-7
QR30007	A-7
QR30008	A-7
QR30052	B-5
QR30053	C-5
QR30055	C-5
QR30056	C-5
QR30057	C-5
QR30058	C-4
QR30059	B-4
QR30060	B-2
QR30062	C-3
QR30063	D-5
Integrated Circuit	
IC30052	C-6
IC30053	A-5
IC30054	A-4
IC30055	C-5
IC30056	C-4
IC30057	B-4
IC30058	C-3
IC30059	C-4
IC30060	D-2
IC30061	D-2
IC30062	B-1
IC30063	B-2
IC30064	B-2
IC30065	C-3
Test Point	
TP30006	A-6
TP30011	C-6
TP30012	B-5
TP30013	A-4
TP30014	B-5
TP30015	B-4
TP30016	D-3
TP30017	D-4
TP30020	A-2
TP30021	A-3
TP30022	A-2
TP30023	B-2
TP30024	B-3
TP30025	C-4
TPG30001	A-9
TPG30002	C-7
TPG30003	B-6
TPG30004	B-3
TPG30005	C-3
Adjustment	
VR30051	C-5
VR30052	B-5
VR30053	B-5
VR30055	B-5
VR30056	C-4
VR30057	C-3
VR30058	C-3
VR30059	D-3
VR30060	D-4
VR30061	D-3
VR30062	B-4
VR30063	C-2
VR30064	C-1
VR30067	B-3
VR30068	B-3
Connector	
P6450	A-10
P30001	A-6
P30002	A-7
P30003	D-7
P30004	C-7
P30005	B-4
P30006	D-9
P30007	A-6
P30008	A-6
P30009	A-7
P30011	A-6
P30012	B-2
P30013	D-4
P30014	D-3
P30015	D-4
P30016	A-2
P30017	C-1

ADDRESS INFORMATION

VIDEO SCHEMATIC DIAGRAM

MAIN SIGNAL PATH IN P

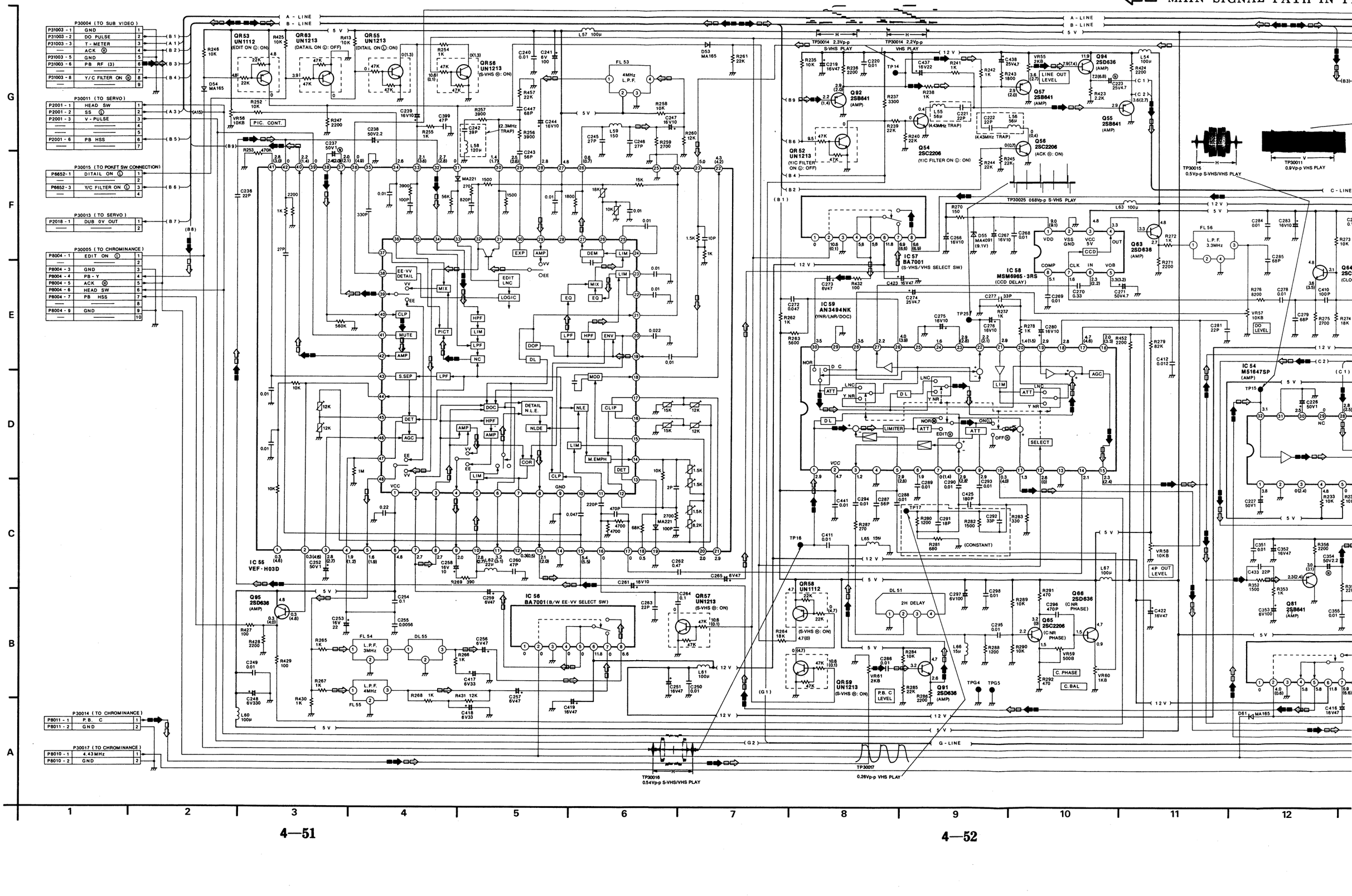

MAIN SIGNAL PATH IN PLAYBACK MODE (VHS)

MAIN SIGNAL PATH IN PLAYBACK MODE (S-VHS)

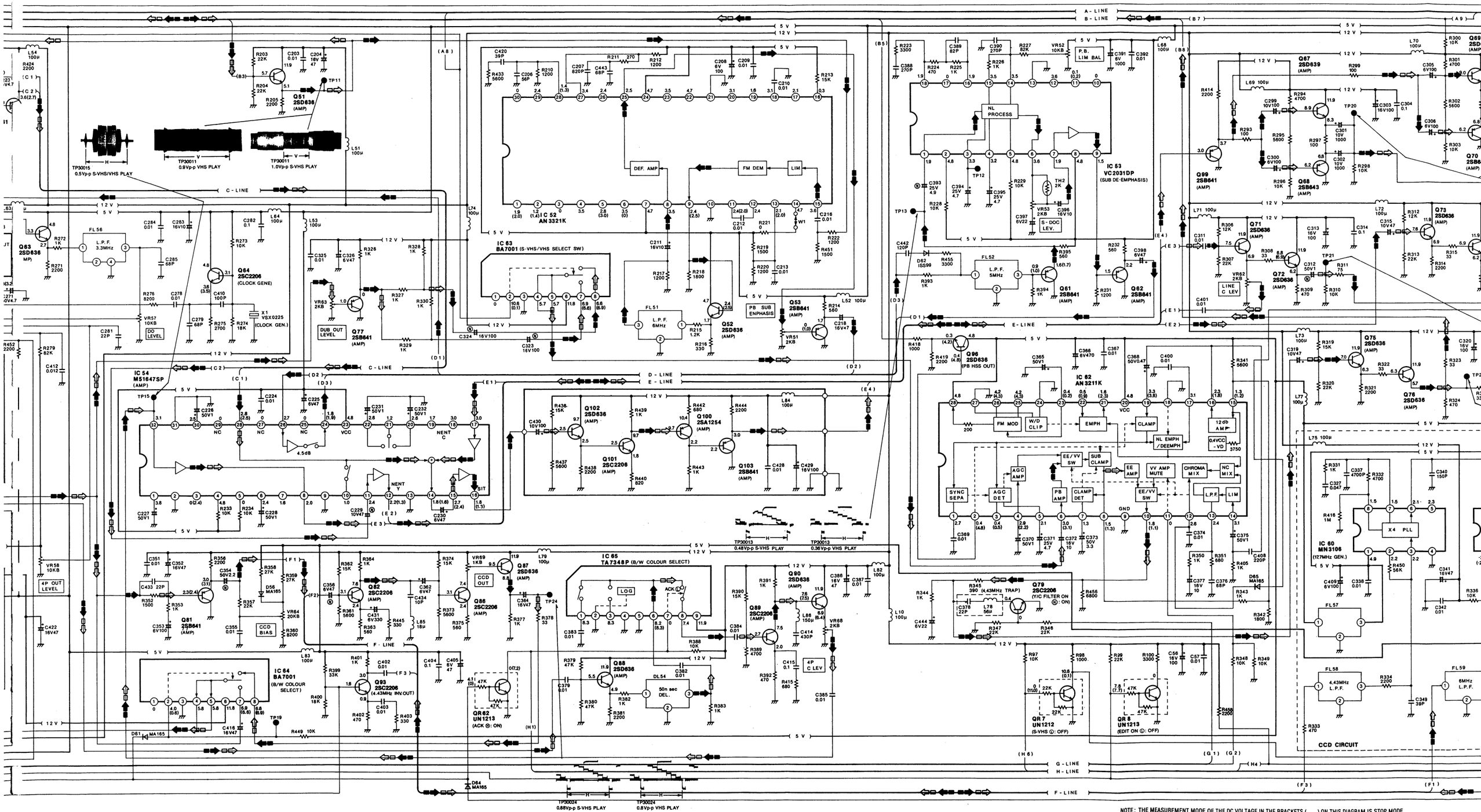

NOTE: THE MEASUREMENT MODE OF THE DC VOLTAGE IN THE BRACKETS ( ) ON THIS DIAGRAM IS STOP MODE.
THE MEASUREMENT MODE OF THE DC VOLTAGE OUT OF THE BRACKETS ON THIS DIAGRAM IS PLAYBACK MODE WITH PAL COLOUR SIGNAL. MEASUREMENT TAPE...S-VHS CASSETTE TAPE.

NOTE: DO NOT U
IN THE P

IN SIGNAL PATH IN PLAYBACK MODE (S-VHS)

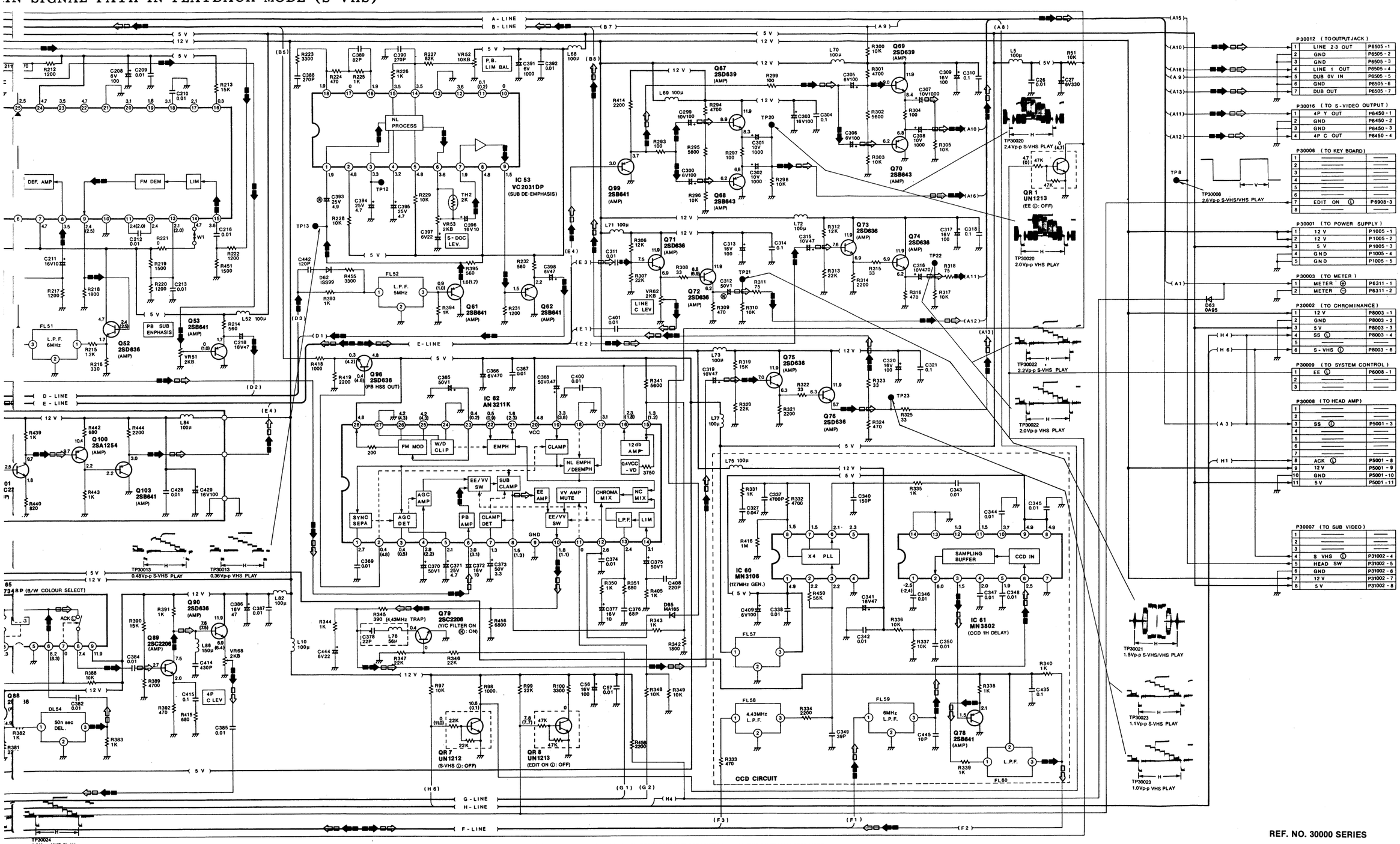

NOTE: THE MEASUREMENT MODE OF THE DC VOLTAGE IN THE BRACKETS ( ) ON THIS DIAGRAM IS STOP MODE.
THE MEASUREMENT MODE OF THE DC VOLTAGE OUT OF THE BRACKETS ON THIS DIAGRAM IS PLAYBACK MODE WITH PAL COLOUR SIGNAL. MEASUREMENT TAPE...S-VHS CASSETTE TAPE.

NOTE: DO NOT USE THE PART NUMBER SHOWN ON THIS DRAWING FOR ORDERING. THE CORRECT PART NUMBER IS SHOWN IN THE PARTS LIST, AND MAY BE SLIGHTLY DIFFERENT OR AMENDED SINCE THIS DRAWING WAS PREPARED.

REF. NO. 30000 SERIES

NORMAL AUDIO, SUB AUDIO PACK (1), SUB AUDIO PACK (2), TIME CODE PACK & METER SCHEMATIC DIAGRAM

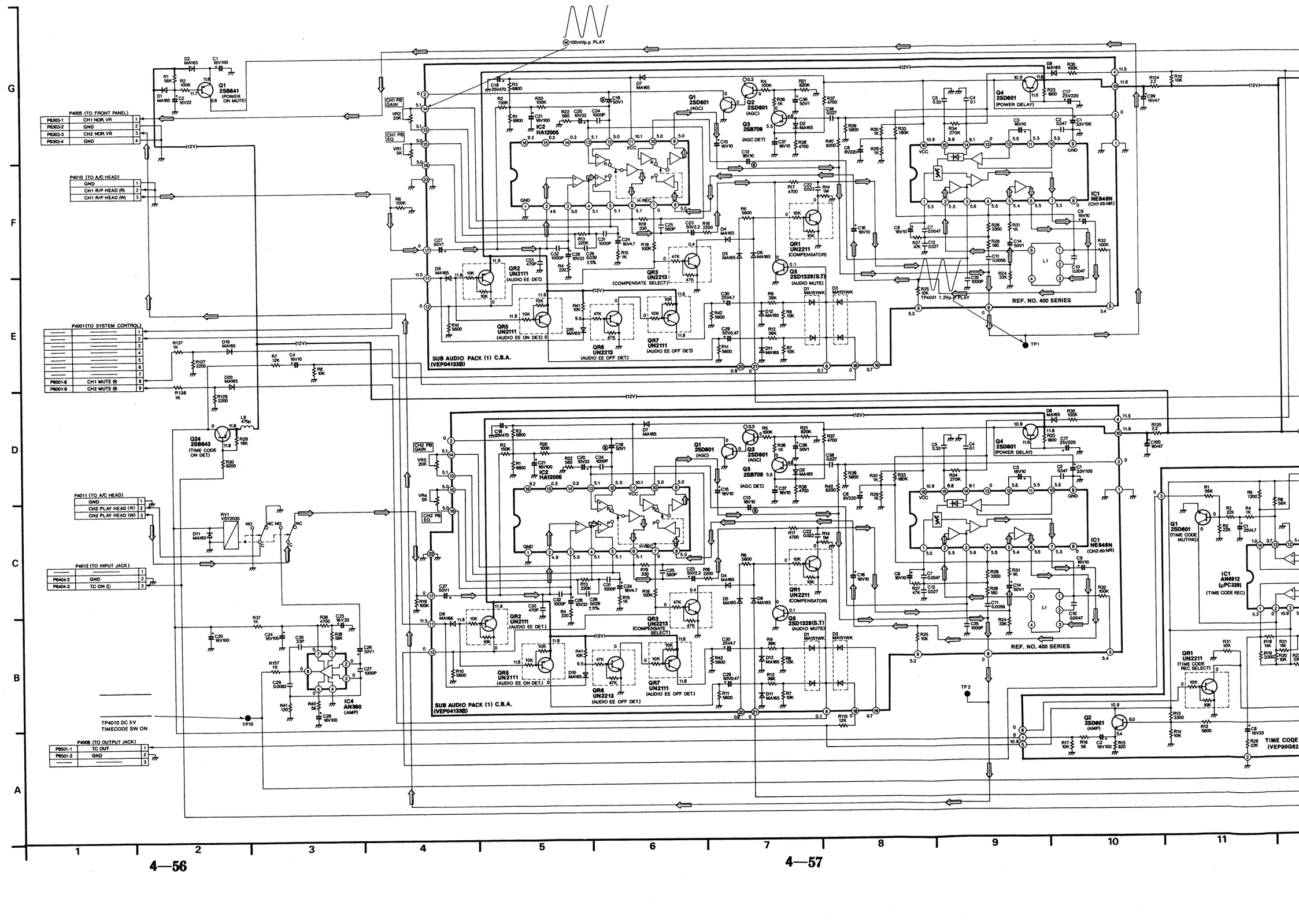

SCHEMATIC DIAGRAM

IMPORTANT SAFETY NOTICE:
COMPONENTS IDENTIFIED WITH THE MARK ⚠ HAVE THE SPECIAL CHARACTERISTICS FOR SAFETY.
WHEN REPLACING ANY OF THESE COMPONENTS, USE ONLY THE SAME TYPE.

⇦ MAIN SIGNAL PATH IN PLAYBACK MODE

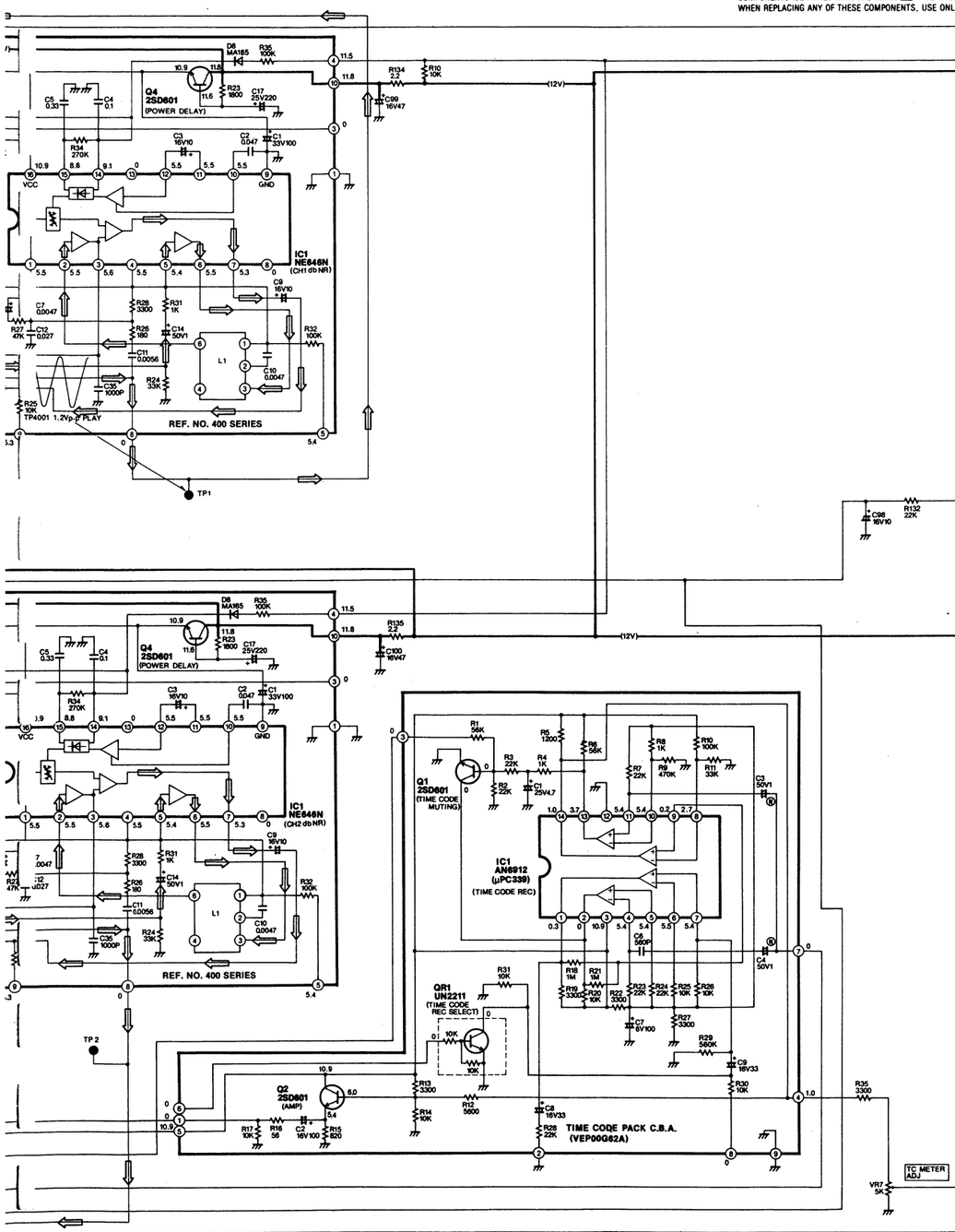

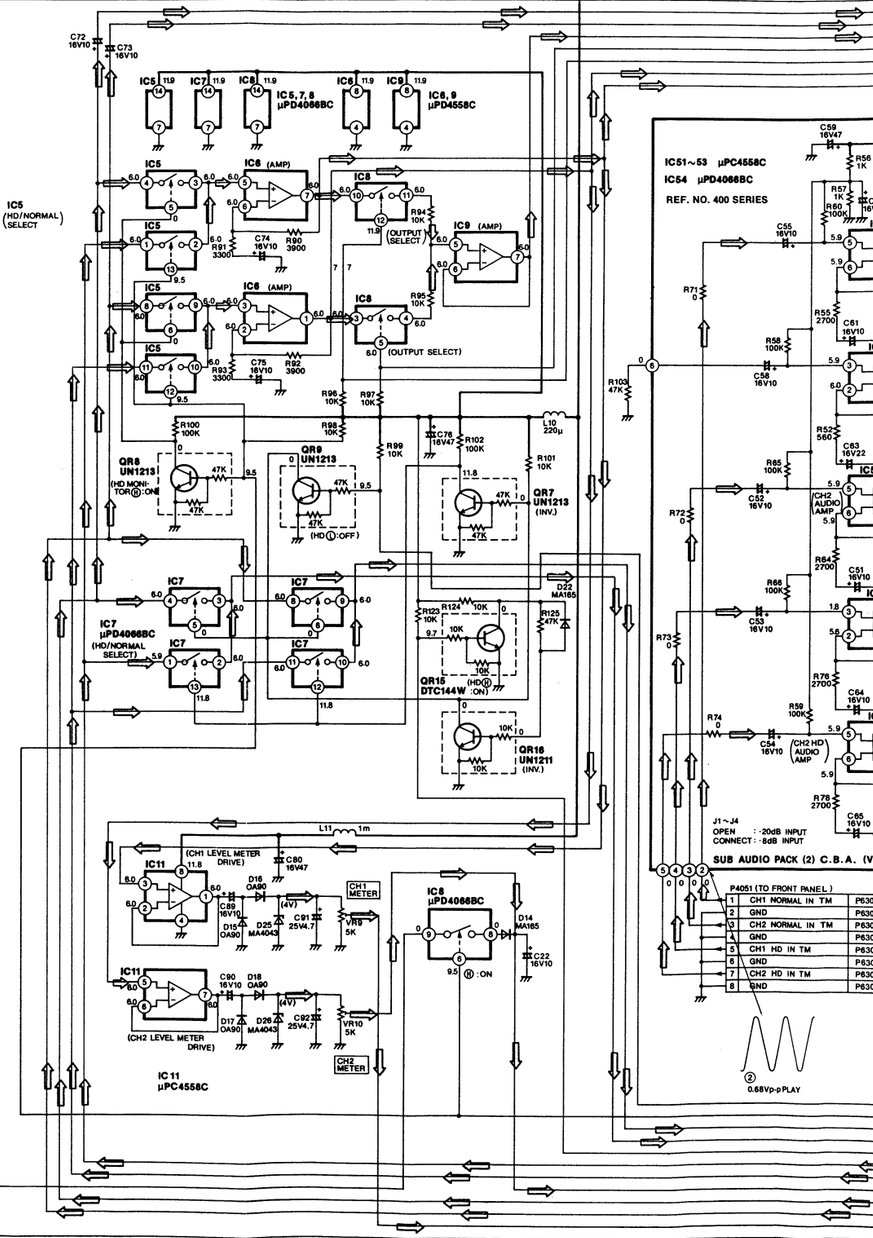

1	CH1 NORMAL IN TM	P6305-
2	GND	P6305-
3	CH2 NORMAL IN TM	P6305-
4	GND	P6305-
5	CH1 HD IN TM	P6304-
6	GND	P6304-
7	CH2 HD IN TM	P6304-
8	GND	P6304-

NOTE: THE MEASUREMENT MODE OF THE DC VOLTAGE IN THE BR
THE MEASUREMENT MODE OF THE DC VOLTAGE OUT OF
MODE WITH PAL COLOUR SIGNAL. MEASUREMENT TAPE

⇦ MAIN SIGNAL PATH IN PLAYBACK MODE

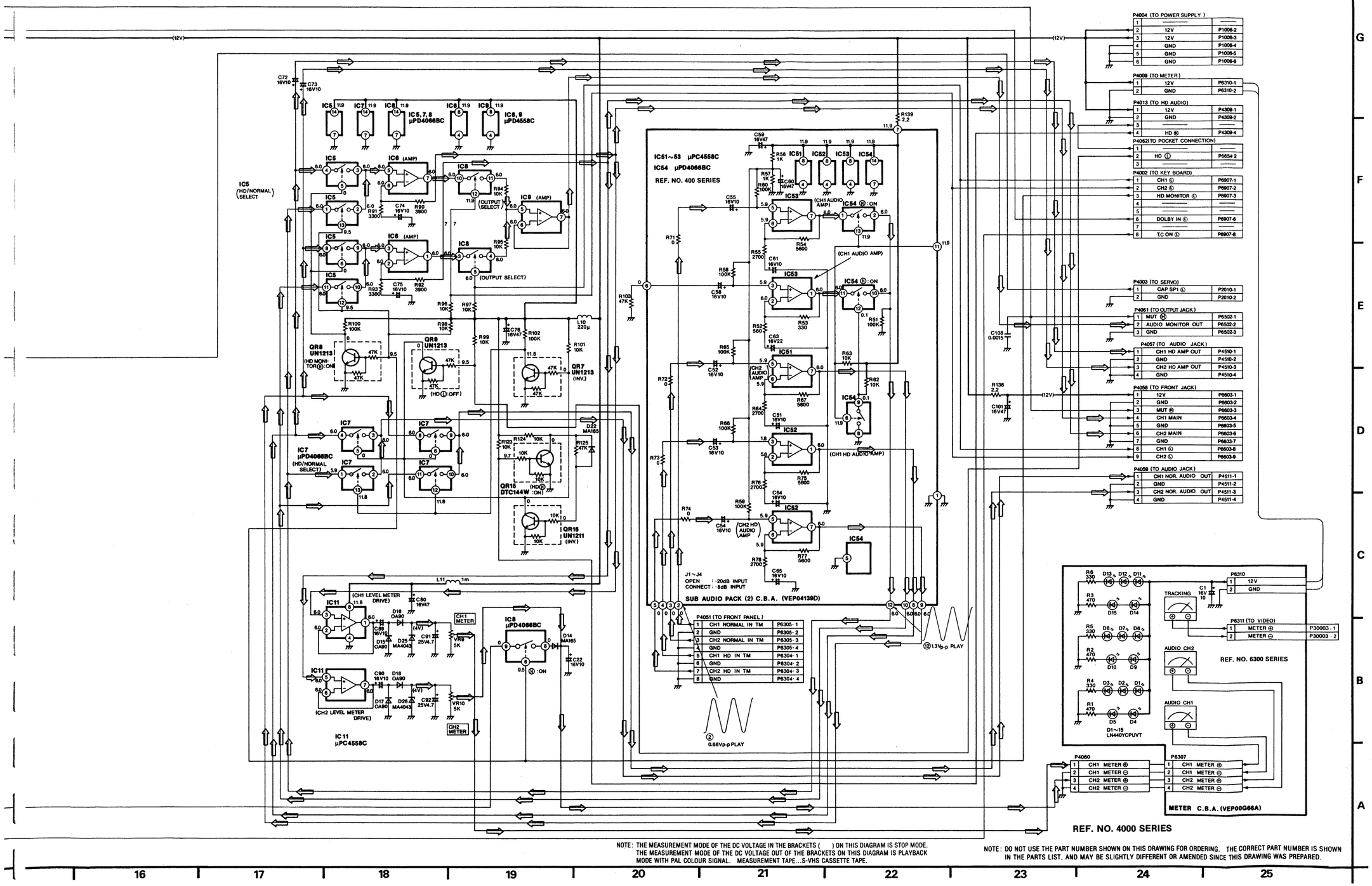

NOTE: THE MEASUREMENT MODE OF THE DC VOLTAGE IN THE BRACKETS ( ) ON THIS DIAGRAM IS STOP MODE. THE MEASUREMENT MODE OF THE DC VOLTAGE OUT OF THE BRACKETS ON THIS DIAGRAM IS PLAYBACK MODE WITH PAL COLOUR SIGNAL. MEASUREMENT TAPE...S-VHS CASSETTE TAPE.

NOTE: DO NOT USE THE PART NUMBER SHOWN ON THIS DRAWING FOR ORDERING. THE CORRECT PART NUMBER IS SHOWN IN THE PARTS LIST, AND MAY BE SLIGHTLY DIFFERENT OR AMENDED SINCE THIS DRAWING WAS PREPARED.

NORMAL AUDIO C.B.A. (VEP04257B), SUB AUDIO PACK (1) C.B.A. (
TIME CODE PACK C.B.A. (VEP00G62A) & METER C.B.A. (VEP00G66

SUB AUDIO PACK (1) C.B.A. (VEP04133B)

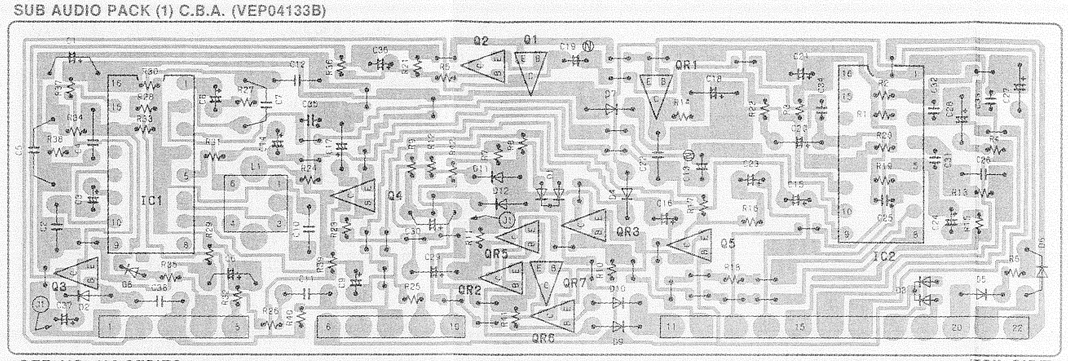

REF. NO. 400 SERIES (FOIL SIDE)

METER C.B.A. (VEP00G66A)

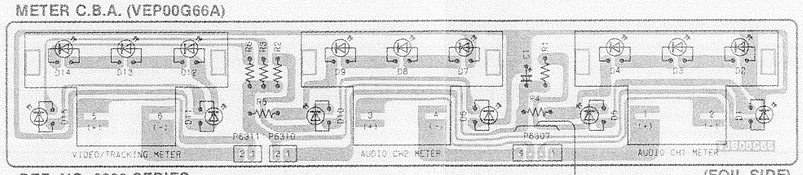

REF. NO. 6300 SERIES (FOIL SIDE)

NORMAL AUDIO C.B.A. (VEP04257B)

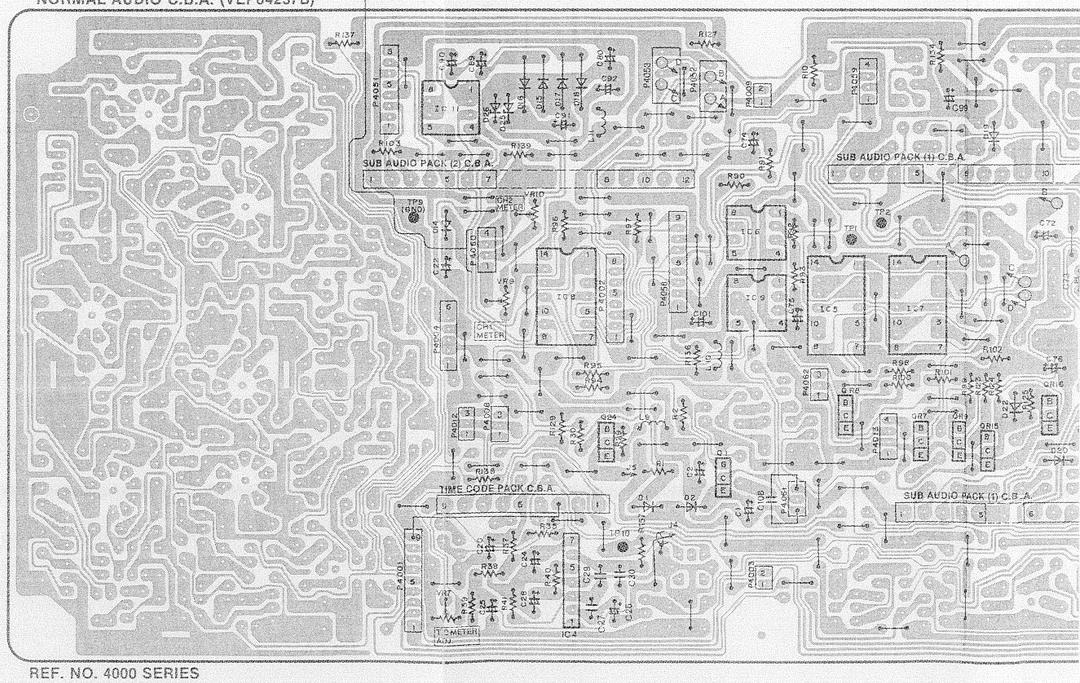

REF. NO. 4000 SERIES

I PACK (1) C.B.A. (VEP04133B), SUB AUDIO PACK (2) C.B.A. (VEP04139D),
R C.B.A. (VEP00G66A)

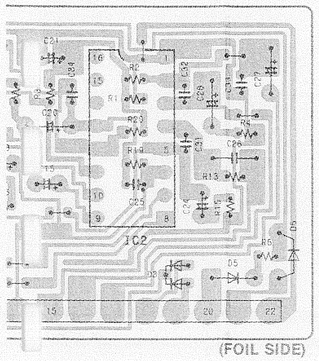

(FOIL SIDE)

SUB AUDIO PACK (2) C.B.A. (VEP04139D)

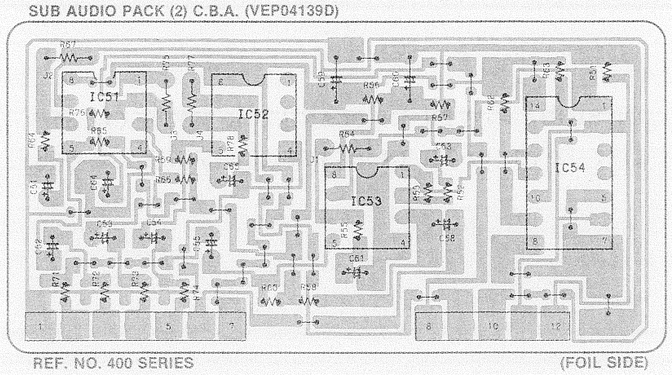

REF. NO. 400 SERIES

(FOIL SIDE)

TIME CODE PACK C.B.A. (VEP00G62A)

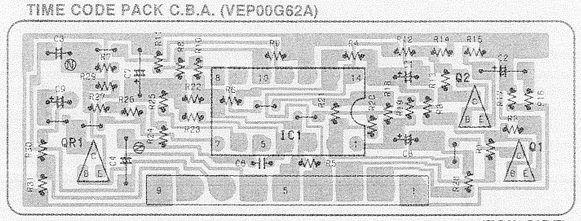

(FOIL SIDE)

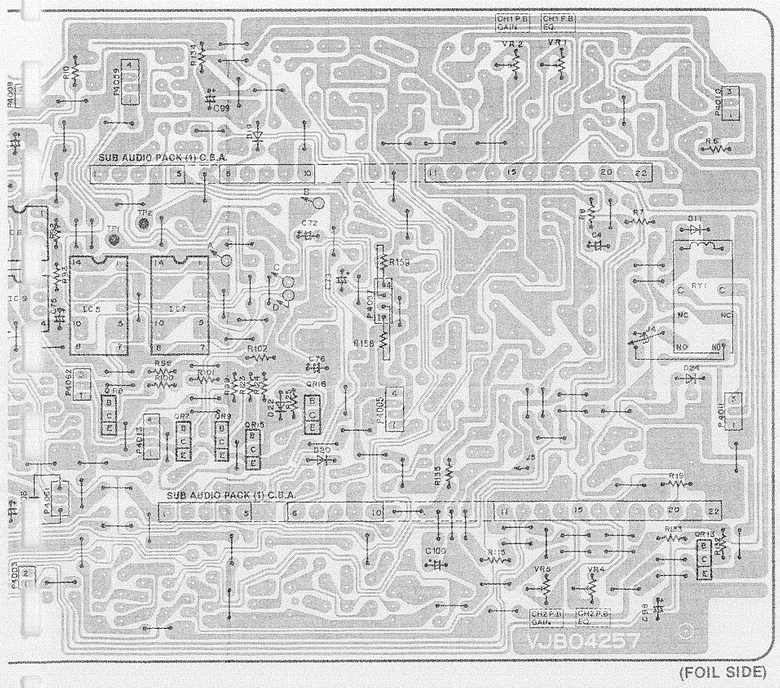

(FOIL SIDE)

SUB AUDIO PACK (1) C.B.A.	
Transistor	
Q401	G-3
Q402	G-3
Q403	F-1
Q404	F-2
Q405	F-4
Transistor & Resistor	
QR401	G-4
QR402	F-3
QR403	F-3
QR405	F-4
QR406	E-3
QR407	F-3
Integrated Circuit	
IC401	F-1
IC402	F-2

ADDRESS INFORMATION

SUB AUDIO PACK (2) C.B.A.	
Integrated Circuit	
IC451	F-6
IC452	F-7
IC453	F-7
IC454	F-8

ADDRESS INFORMATION

METER C.B.A.	
Connector	
P6307	D-3
P6310	D-2
P6311	D-2

ADDRESS INFORMATION

TIME CODE PACK C.B.A.	
Transistor	
Q1	D-8
Q2	E-8
Transistor & Resistor	
QR1	D-6
Integrated Circuit	
IC1	D-7

ADDRESS INFORMATION

NORMAL AUDIO C.B.A.	
Transistor	
Q4001	B-4
Q4019	B-1
Q4024	B-3
Transistor & Resistor	
QR4007	B-5
QR4008	B-5
QR4009	B-5
QR4013	A-7
QR4015	B-5
QR4016	B-5
Integrated Circuit	
IC4004	A-3
IC4005	B-4
IC4006	C-4
IC4007	B-5
IC4008	B-3
IC4009	B-4
IC4011	C-3
Test Point	
TP4001	C-5
TP4002	C-5
TP4009 (GND)	C-3
TP4010	A-3
Adjustment	
VR4001	C-7
VR4002	C-6
VR4004	A-7
VR4005	A-7
VR4007	A-3
VR4009	B-3
VR4010	C-3
Connector	
P4001	A-3
P4002	B-3
P4003	A-4
P4004	B-3
P4005	B-6
P4008	B-3
P4009	C-4
P4010	C-7
P4011	B-7
P4012	B-3
P4013	B-5
P4051	C-2
P4052	C-4
P4053	C-4
P4057	B-6
P4058	B-4
P4059	C-5
P4060	C-3
P4061	A-4
P4062	B-4

ADDRESS INFORMATION

HEAD AMP SCHEMATIC DIAGRAM — VIDEO SECTION —

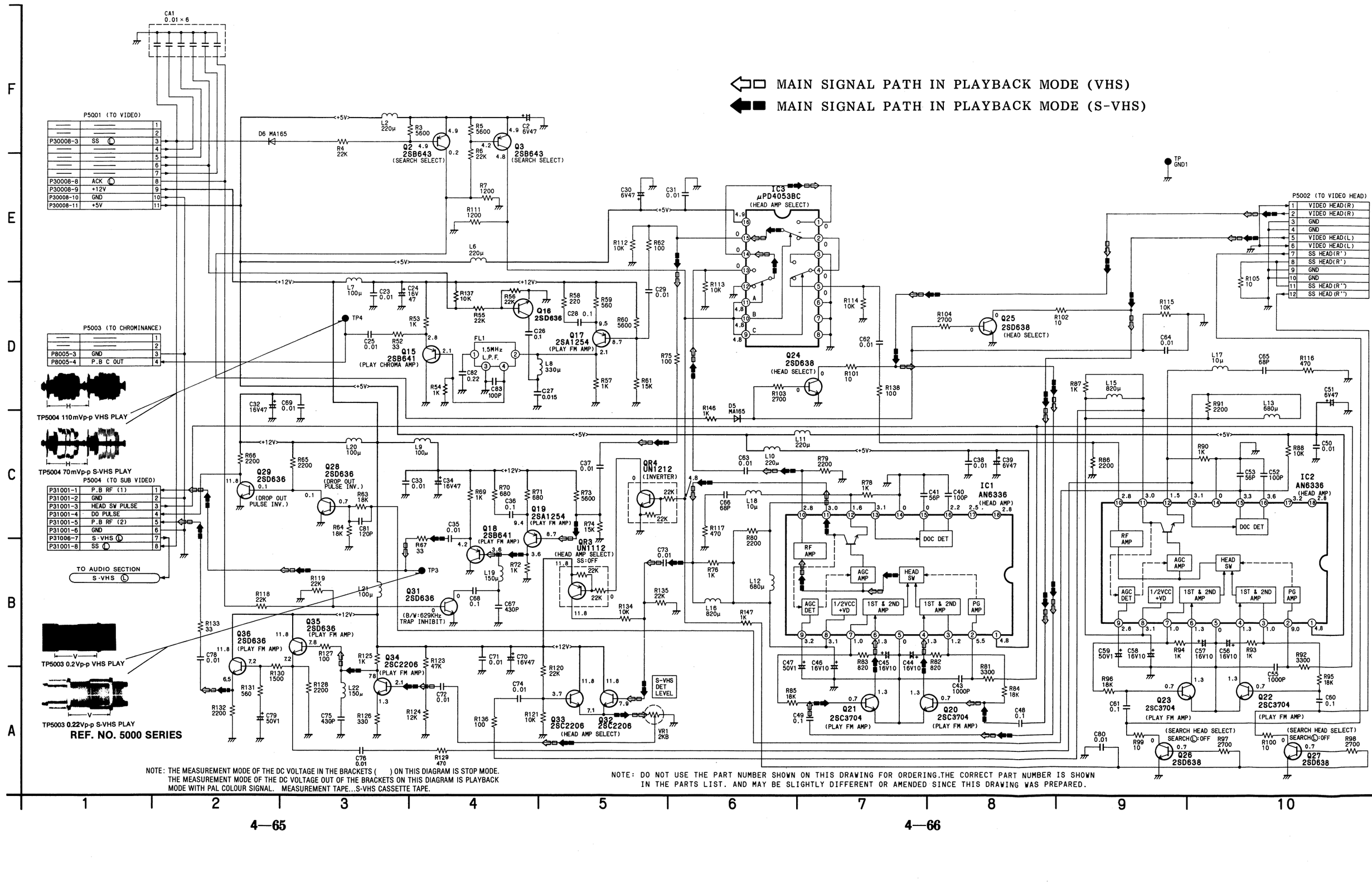

NOTE: THE MEASUREMENT MODE OF THE DC VOLTAGE IN THE BRACKETS ( ) ON THIS DIAGRAM IS STOP MODE. THE MEASUREMENT MODE OF THE DC VOLTAGE OUT OF THE BRACKETS ON THIS DIAGRAM IS PLAYBACK MODE WITH PAL COLOUR SIGNAL. MEASUREMENT TAPE...S-VHS CASSETTE TAPE.

NOTE: DO NOT USE THE PART NUMBER SHOWN ON THIS DRAWING FOR ORDERING. THE CORRECT PART NUMBER IS SHOWN IN THE PARTS LIST. AND MAY BE SLIGHTLY DIFFERENT OR AMENDED SINCE THIS DRAWING WAS PREPARED.

HD AUDIO C.B.A. (VEP04134F) & HEAD AMP C.B.A. (VEP05141B)

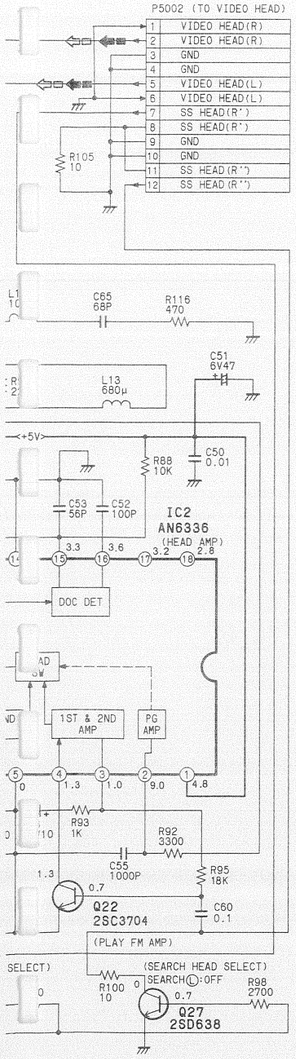

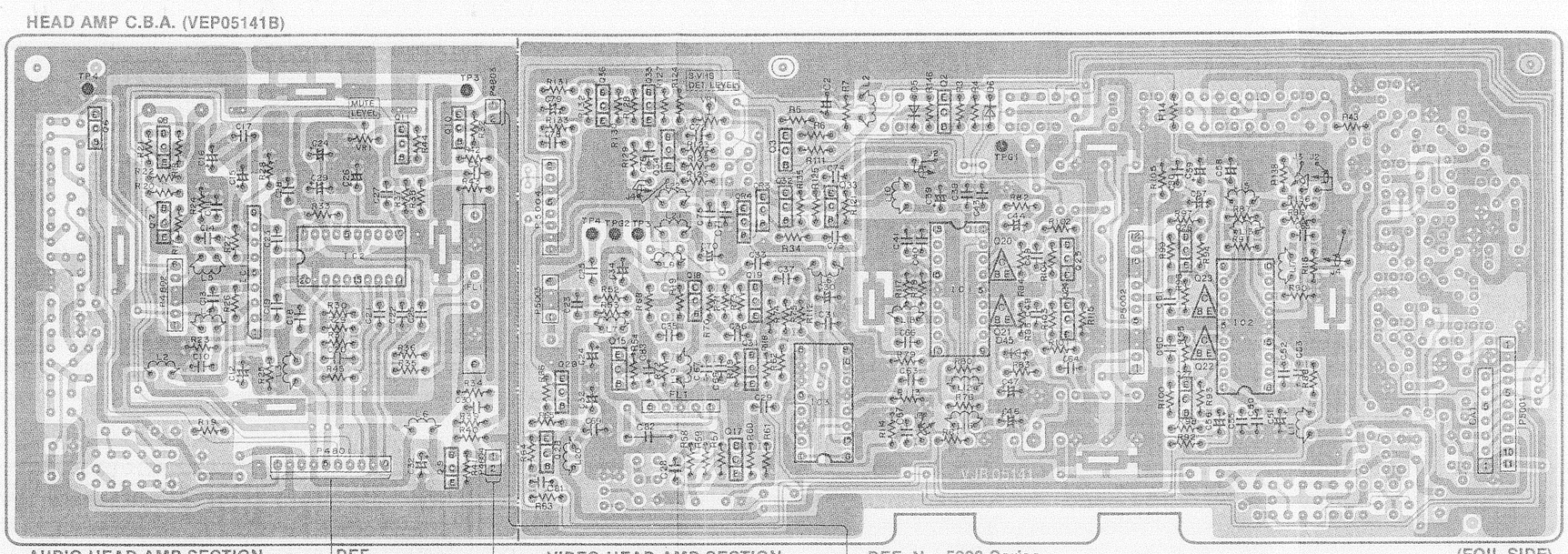

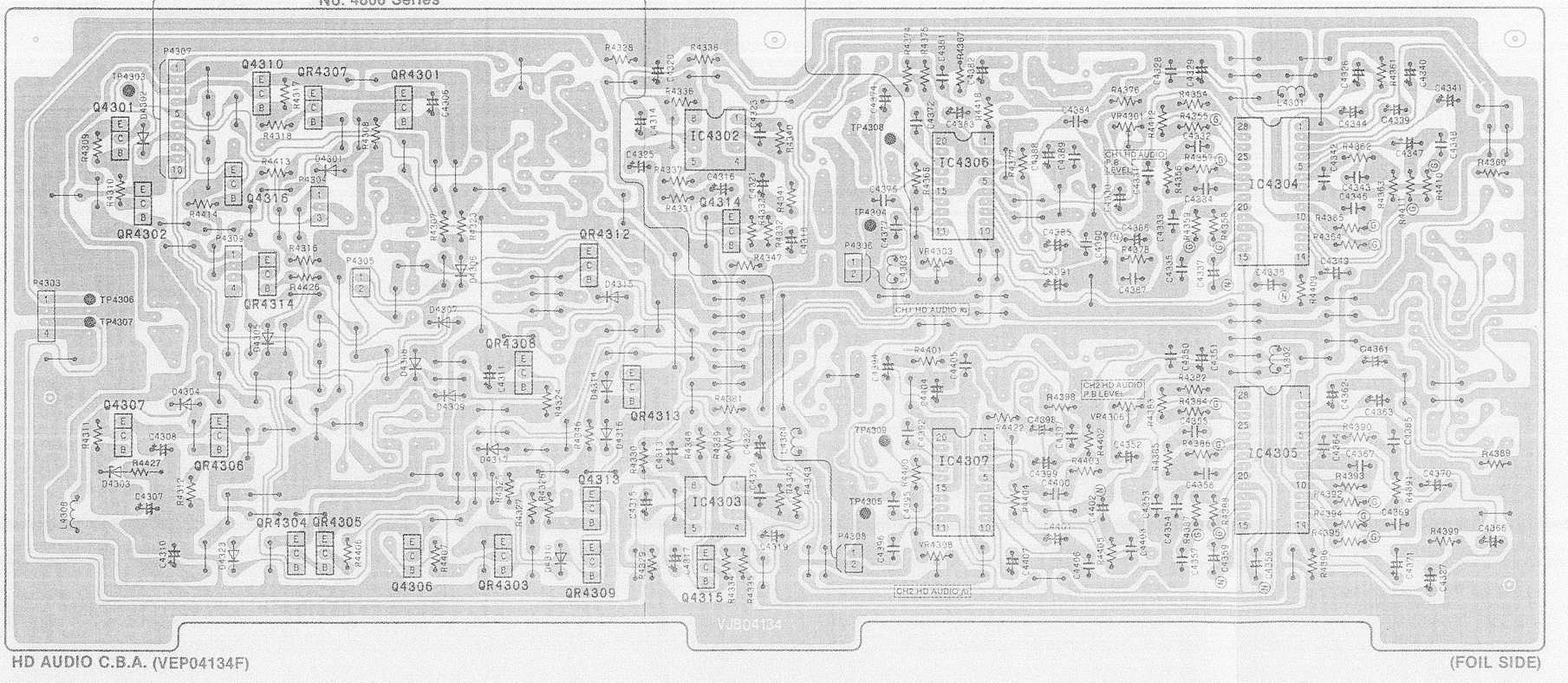

HD AUDIO & HEAD AMP (AUDIO SECTION) SCHEMATIC DIAGRAM

HD AUDIO C.B.A.	
Transistor	
Q4301	C-1
Q4302	C-6
Q4306	A-2
Q4307	B-1
Q4310	C-2
Q4313	A-3
Q4314	C-4
Q4315	A-4
Q4316	C-2
Transistor & Resistor	
QR4301	C-2
QR4302	C-1
QR4303	A-3
QR4304	A-2
QR4305	A-2
QR4306	B-2
QR4307	C-2
QR4308	B-3
QR4309	A-3
QR4312	C-3
QR4313	B-3
QR4314	B-2
Integrated Circuit	
IC4302	C-4
IC4303	A-4
IC4304	C-6
IC4305	B-6
IC4306	C-5
IC4307	A-5
Test Point	
TP4303	C-1
TP4304	C-4
TP4305	A-4
Adjustment	
VR4301	C-6
VR4303	B-5
VR4306	B-6
VR4308	A-5
Connector	
P4303	B-1
P4304	C-2
P4305	B-2
P4306	B-4
P4307	C-1
P4308	A-4
P4309	B-2

ADDRESS INFORMATION

HEAD AMP C.B.A.	
Transistor	
Q4806	E-1
Q4807	E-1
Q4808	E-1
Q4809	D-3
Q4810	E-3
Q4811	E-2
Q5002	E-5
Q5003	E-4
Q5004	D-7
Q5015	D-3
Q5017	D-4
Q5018	E-4
Q5019	E-4
Q5020	E-5
Q5021	E-5
Q5022	E-6
Q5023	E-6
Q5024	E-5
Q5025	E-5
Q5026	E-6
Q5027	D-6
Q5028	D-3
Q5029	D-3
Q5031	D-4
Q5032	E-4
Q5033	E-4
Q5034	E-3
Q5035	E-3
Q5036	E-3
Transistor & Resistor	
QR5003	E-4
QR5004	E-4
Integrated Circuit	
IC4801	E-2
IC4802	E-2
IC5001	E-5
IC5002	E-6
IC5003	D-4
Test Point	
TP4801	E-1
TP4802	E-1
TP4803	E-3
TP4804	E-1
TP5001	D-5
TP5002	E-5
TP5003	E-3
TP5004	E-3
TPG5001	E-5
TPG5002	E-3
Adjustment	
VR4801	E-2
VR5001	E-4
Connector	
P4801	D-2
P4802	E-1
P4803	E-3
P4804	D-3
P5001	D-7
P5002	E-5
P5003	E-3
P5004	E-3

ADDRESS INFORMATION

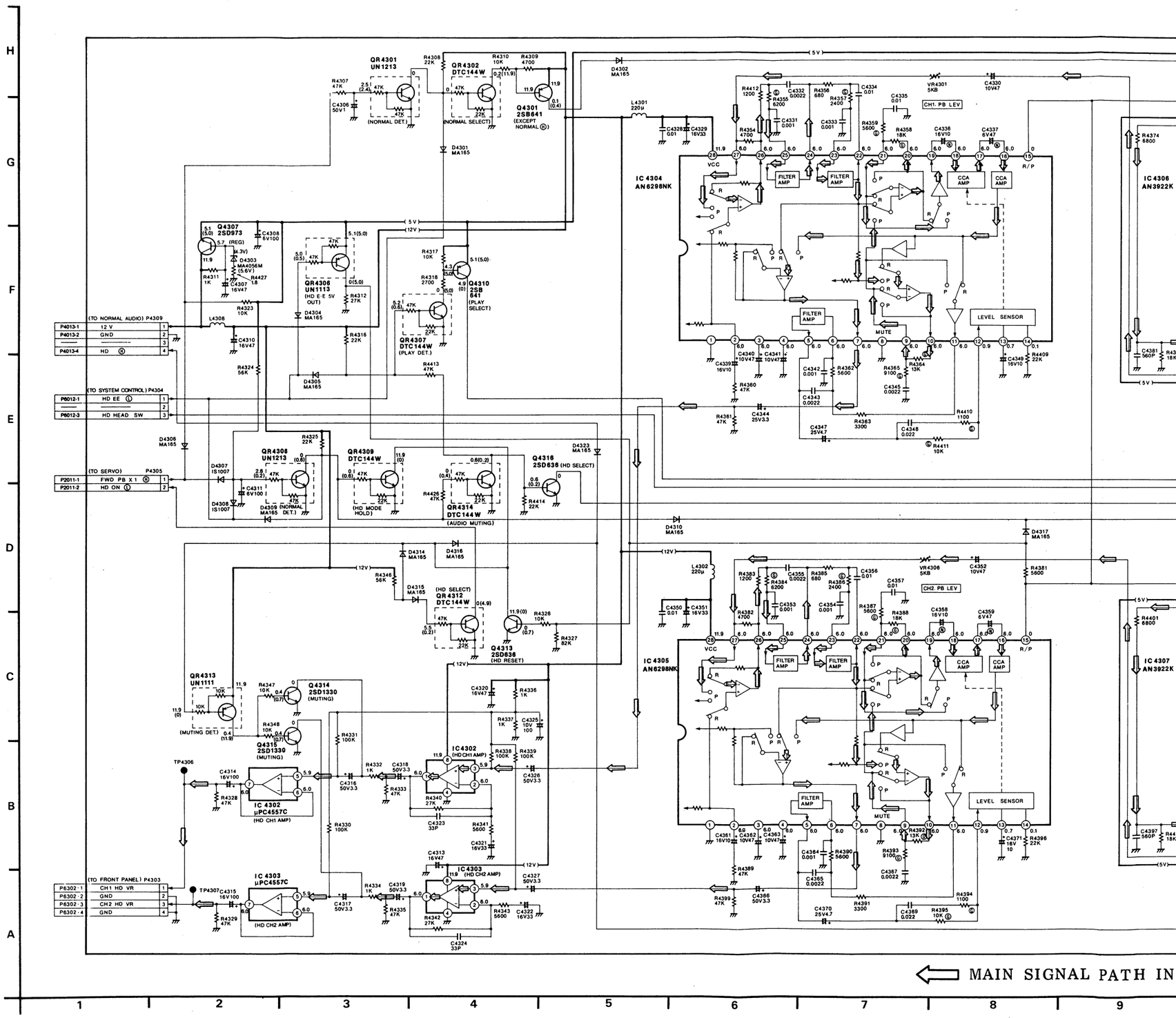

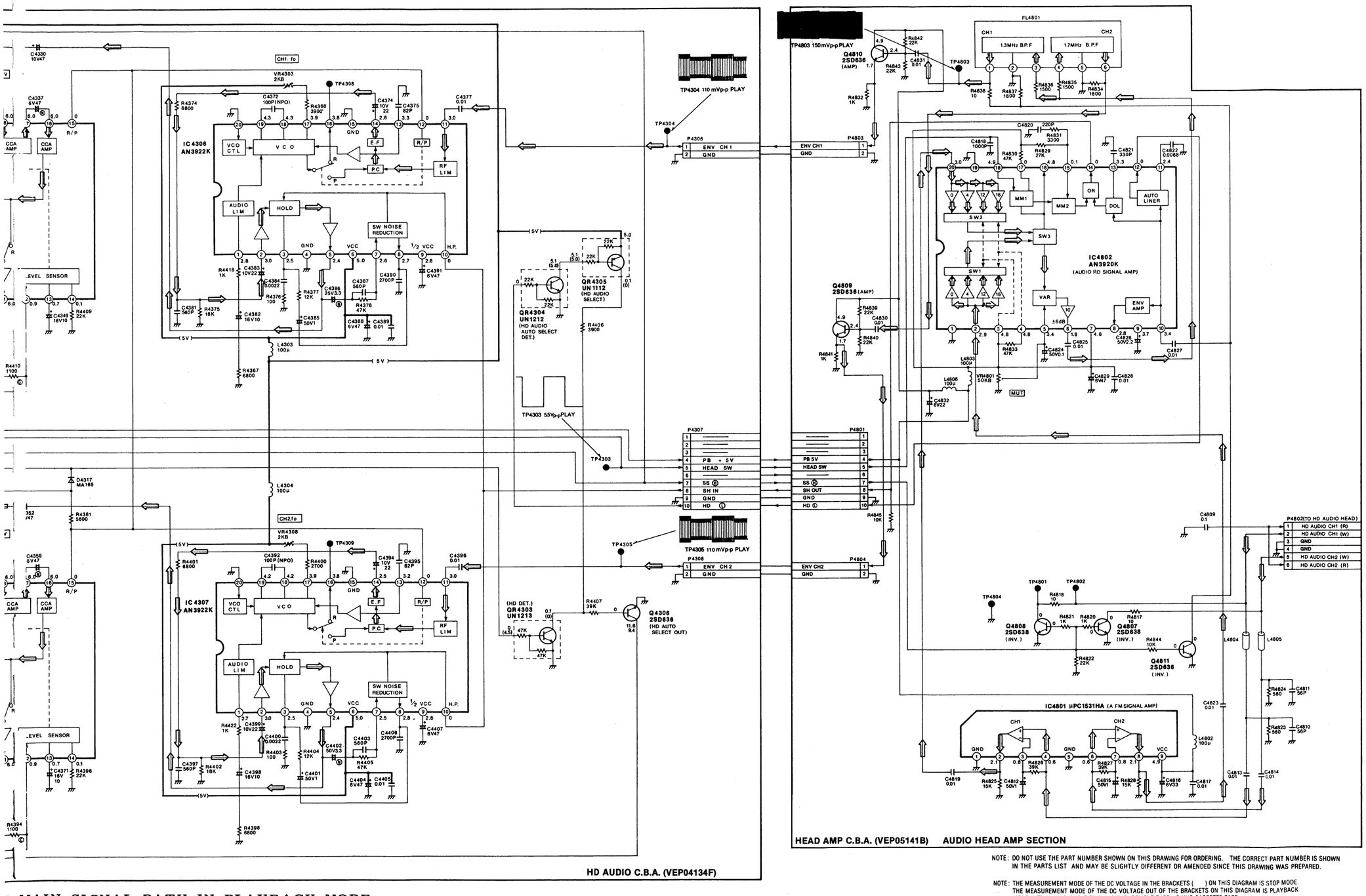

NOTE: DO NOT USE THE PART NUMBER SHOWN ON THIS DRAWING FOR ORDERING. THE CORRECT PART NUMBER IS SHOWN IN THE PARTS LIST AND MAY BE SLIGHTLY DIFFERENT OR AMENDED SINCE THIS DRAWING WAS PREPARED.

NOTE: THE MEASUREMENT MODE OF THE DC VOLTAGE IN THE BRACKETS ( ) ON THIS DIAGRAM IS STOP MODE. THE MEASUREMENT MODE OF THE DC VOLTAGE OUT OF THE BRACKETS ON THIS DIAGRAM IS PLAYBACK MODE WITH PAL COLOUR SIGNAL. MEASUREMENT TAPE...S-VHS CASSETTE TAPE.

MAIN SIGNAL PATH IN PLAYBACK MODE

SUB VIDEO
SUB VIDEO C.B.A.
HD AUDIO

SUB VIDEO SCHEMATIC DIAGRAM

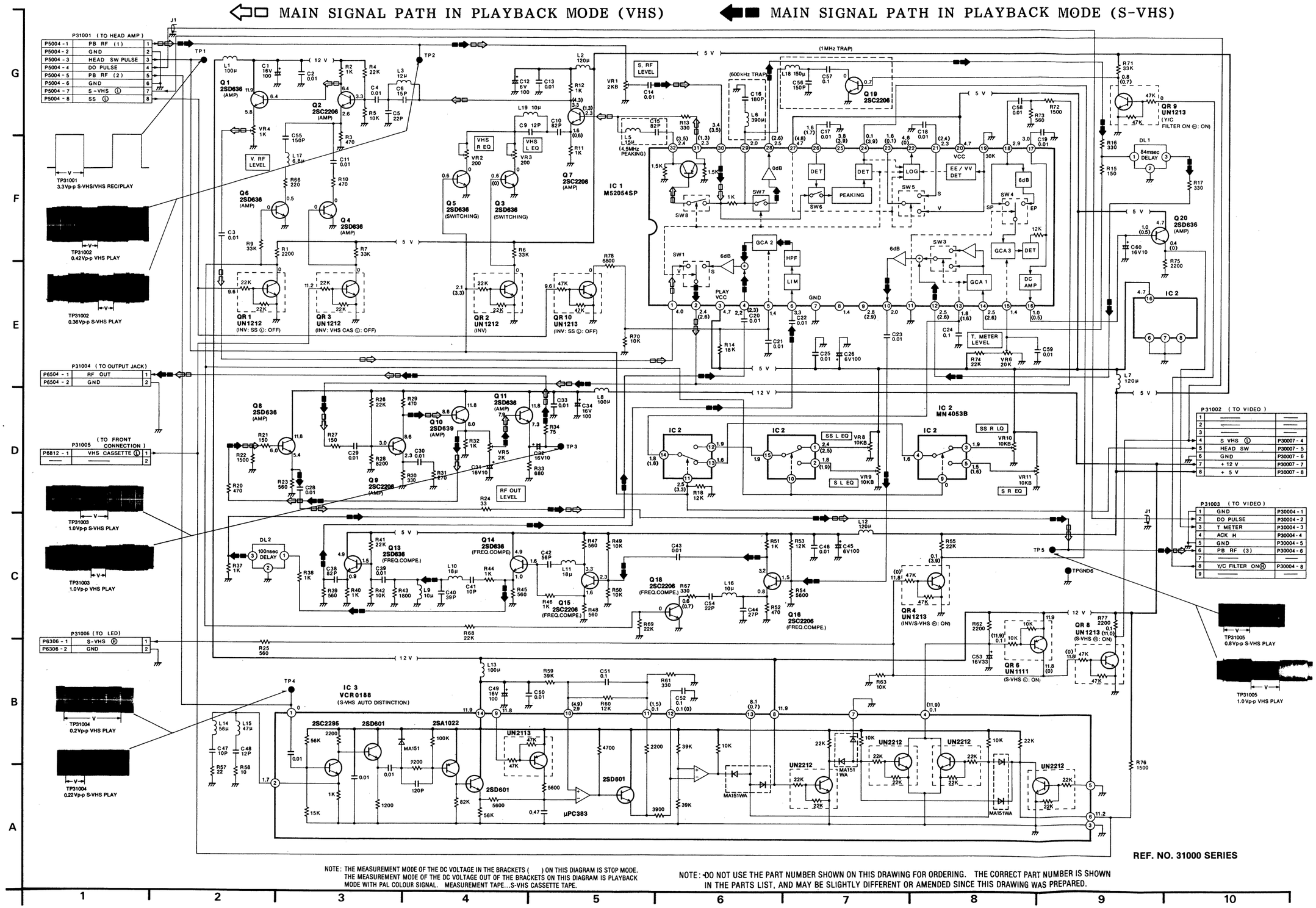

NOTE: THE MEASUREMENT MODE OF THE DC VOLTAGE IN THE BRACKETS ( ) ON THIS DIAGRAM IS STOP MODE.
THE MEASUREMENT MODE OF THE DC VOLTAGE OUT OF THE BRACKETS ON THIS DIAGRAM IS PLAYBACK MODE WITH PAL COLOUR SIGNAL. MEASUREMENT TAPE...S-VHS CASSETTE TAPE.

NOTE: DO NOT USE THE PART NUMBER SHOWN ON THIS DRAWING FOR ORDERING. THE CORRECT PART NUMBER IS SHOWN IN THE PARTS LIST, AND MAY BE SLIGHTLY DIFFERENT OR AMENDED SINCE THIS DRAWING WAS PREPARED.

SUB VIDEO C.B.A. (VEP03558B)

SUB VIDEO C.B.A. (VEP03558B)

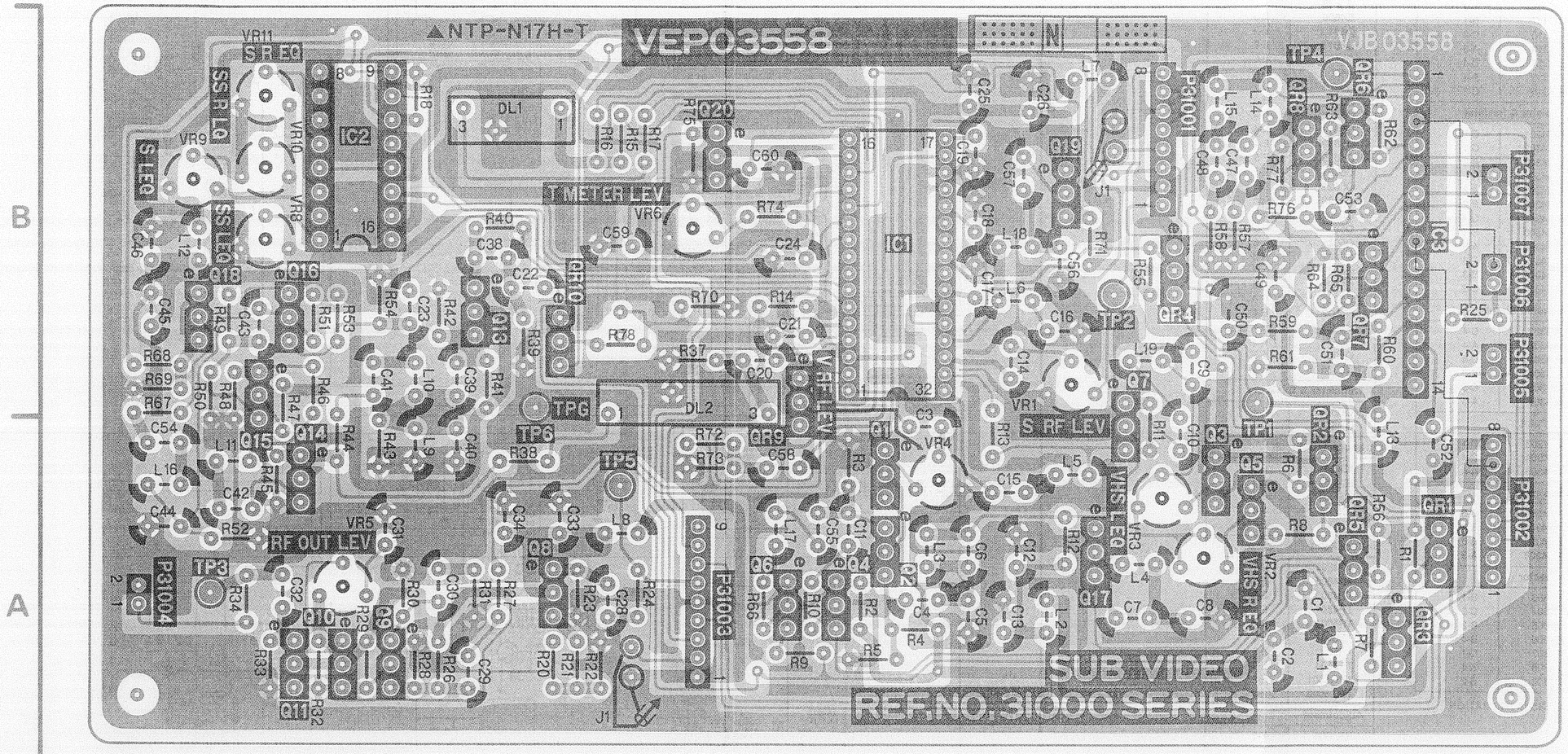

SUB VIDEO C.B.A.												
Transistor		Q31015	B-1	QR31006	B-4	TP31002	B-3	VR31008	B-1
Q31001	A-3	Q31016	B-1	QR31007	B-4	TP31003	A-1	VR31009	B-1
Q31002	A-3	Q31017	A-3	QR31008	B-4	TP31004	B-4	VR31010	B-1
Q31003	A-4	Q31018	B-1	QR31009	B-3	TP31005	A-2	VR31011	B-1
Q31004	A-3	Q31019	B-3	QR31010	B-2	TP31006 (GND)	B-2		
Q31006	A-2	Q31020	B-2	**Integrated Circuit**		**Adjustment**		**Connector**	
Q31007	B-3	**Transistor & Resistor**		IC31001	B-3	VR31001	B-3	P31001	B-4
Q31008	A-2	QR31001	A-4	IC31002	B-1	VR31002	A-4	P31002	A-4
Q31009	A-1	QR31002	A-4	IC31003	B-4	VR31003	A-4	P31003	A-2
Q31010	A-1	QR31003	A-4	**Test Point**		VR31004	A-3	P31004	A-1
Q31011	A-1	QR31004	B-4	TP31001	B-4	VR31005	A-1	P31005	B-4
Q31013	B-2	QR31005	A-4			VR31006	B-2	P31006	B-4
Q31014	A-1							P31007	B-4

ADDRESS INFORMATION

FRONT JACK SCHEMATIC DIAGRAM

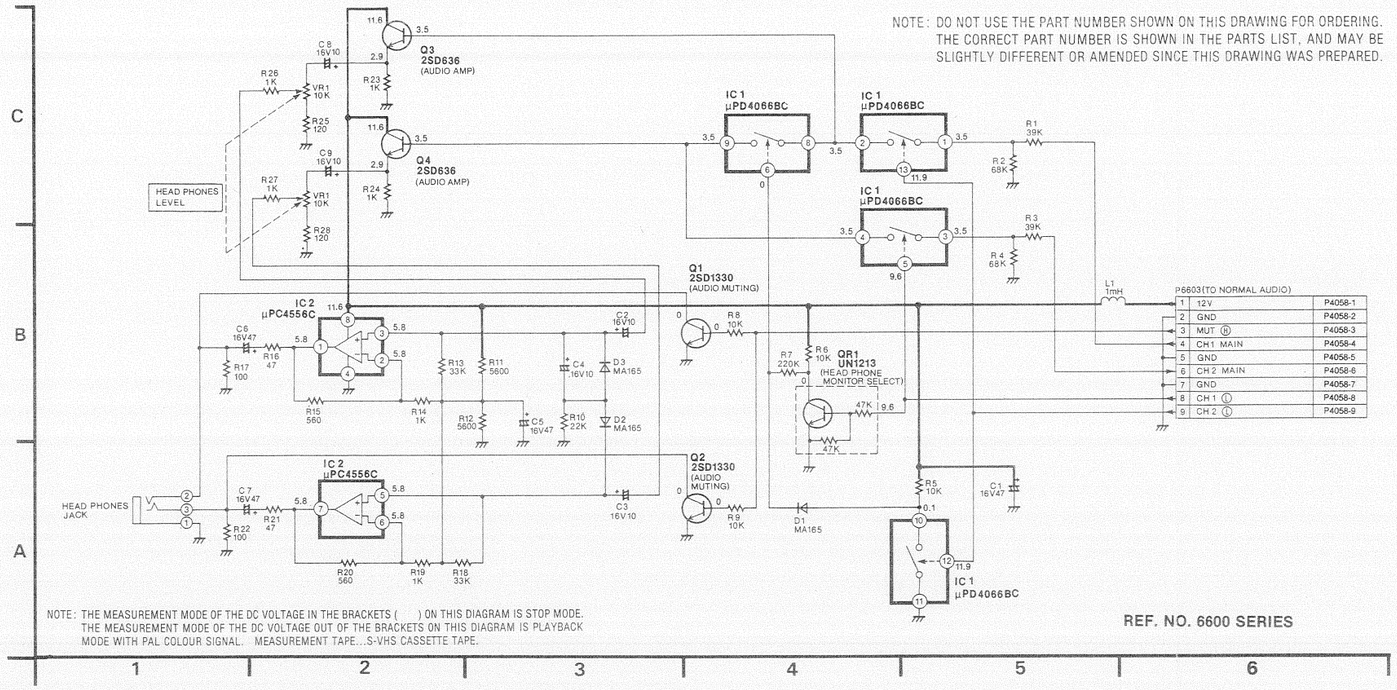

FRONT PANEL SCHEMATIC DIAGRAM

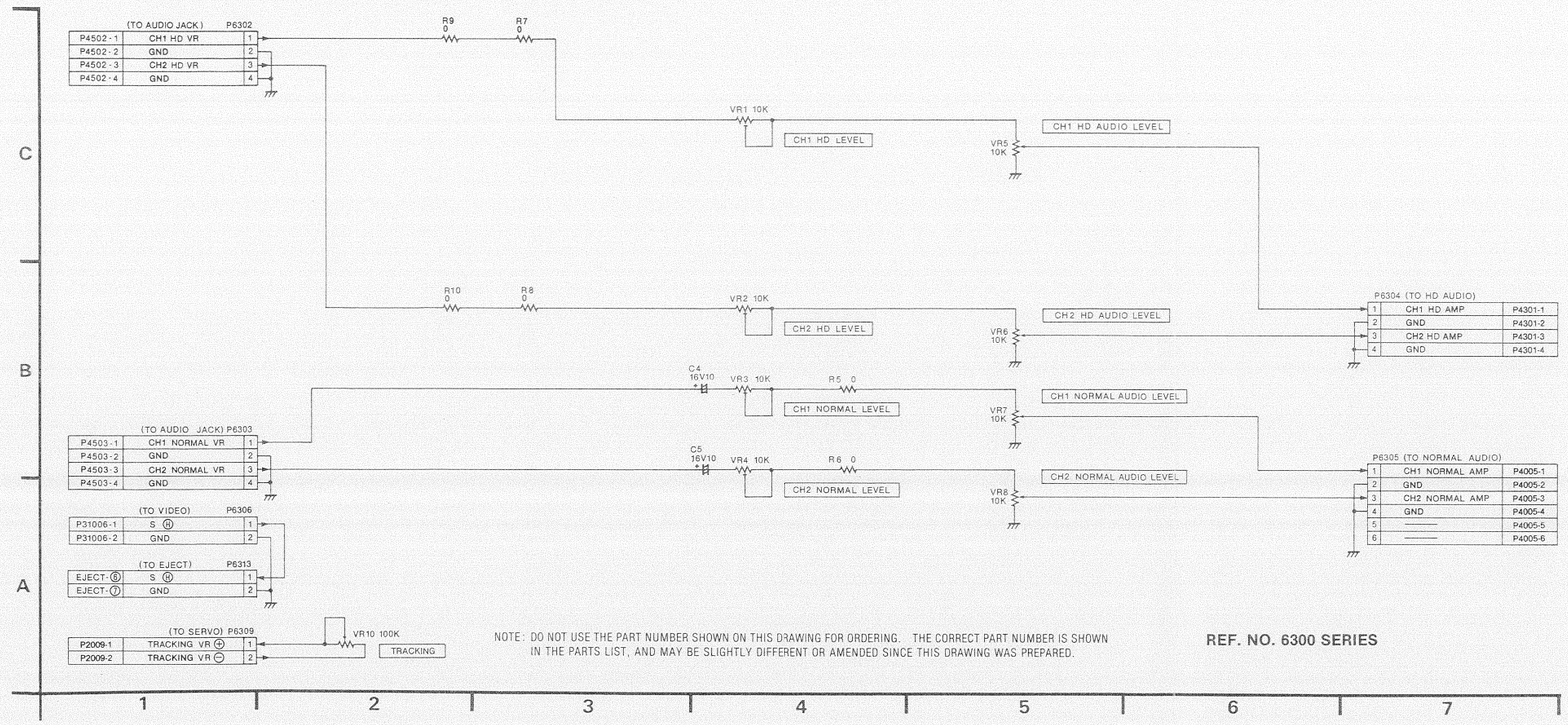

FRONT JACK C.B.A. (VEP00F76B) & FRONT PAN

FRONT JACK C.B.A. (VEP00F76B)

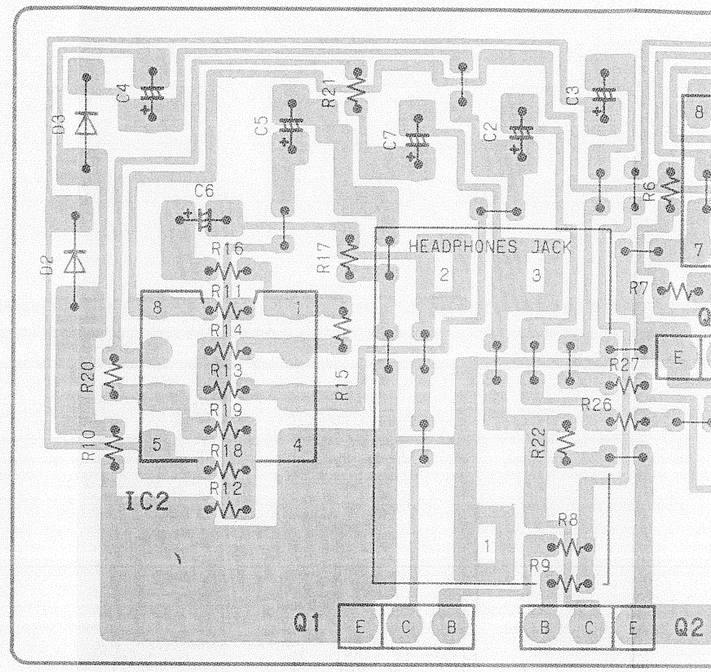

REF. NO. 6600 SERIES

FRONT PANEL C.B.A. (VEP06426D

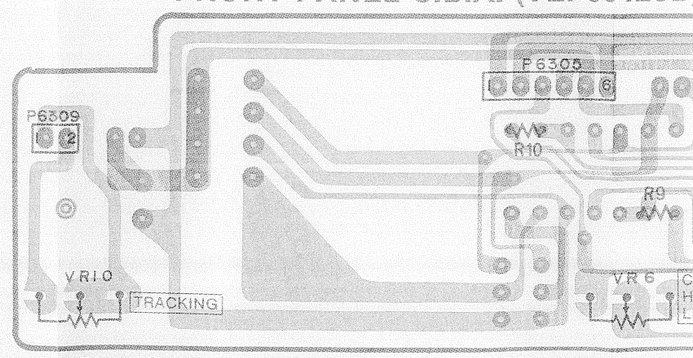

REF. NO. 6300 SERIES

63) & FRONT PANEL C.B.A. (VEP06426D)

0 F76B)

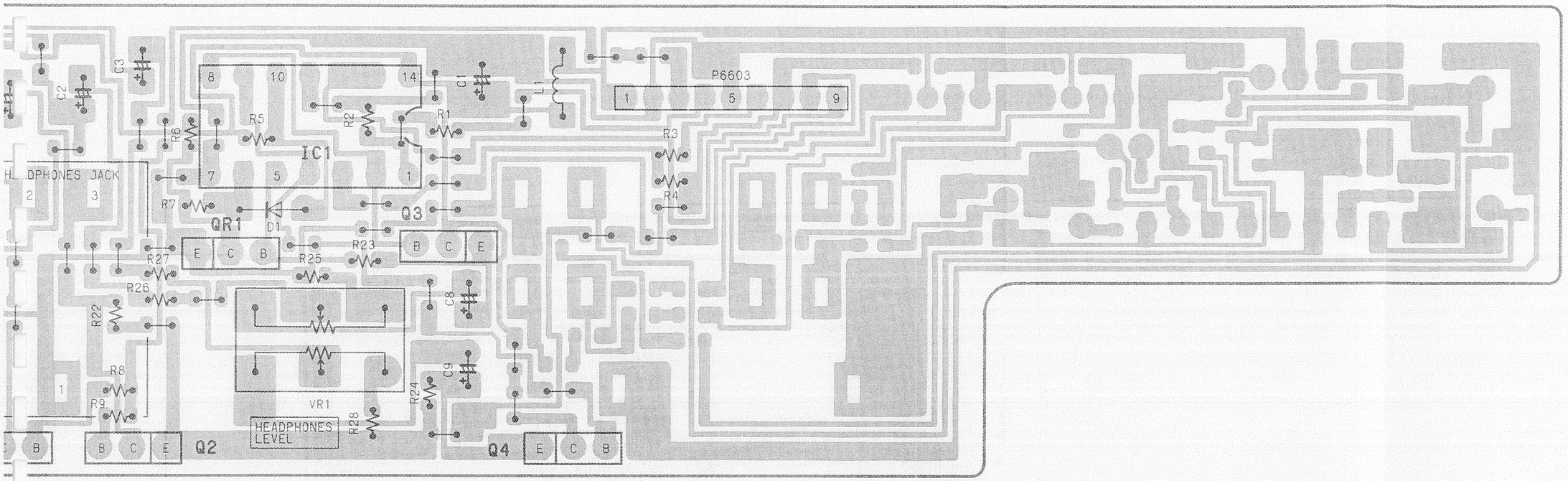

(FOIL SIDE)

FRONT JACK & FRONT PANEL C.B.A.	
Transistor	
Q6601	B-2
Q6602	B-2
Q6603	C-3
Q6604	B-3
Transister & Resistor	
QR6601	C-2
Integrated Circuit	
IC6601	C-3
IC6602	C-1
Adjustment	
VR6301	A-3
VR6302	A-3
VR6303	A-4
VR6304	A-3
VR6305	A-3
VR6306	A-2
VR6307	A-4
VR6308	A-3
VR6310	A-1
VR6601	B-3
Connector	
P6302	A-3
P6303	A-3
P6304	A-3
P6305	A-2
P6306	A-4
P6309	A-1
P6313	A-4
P6603	C-4

ADDRESS INFORMATION

L C.B.A. (VEP06426D)

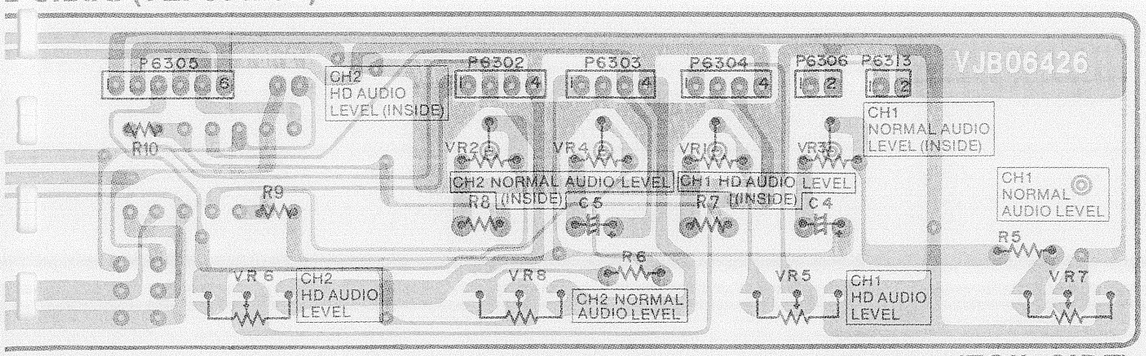

(FOIL SIDE)

2 3 4 5 6

AUDIO JACK C.B.A. (VEP04269A)

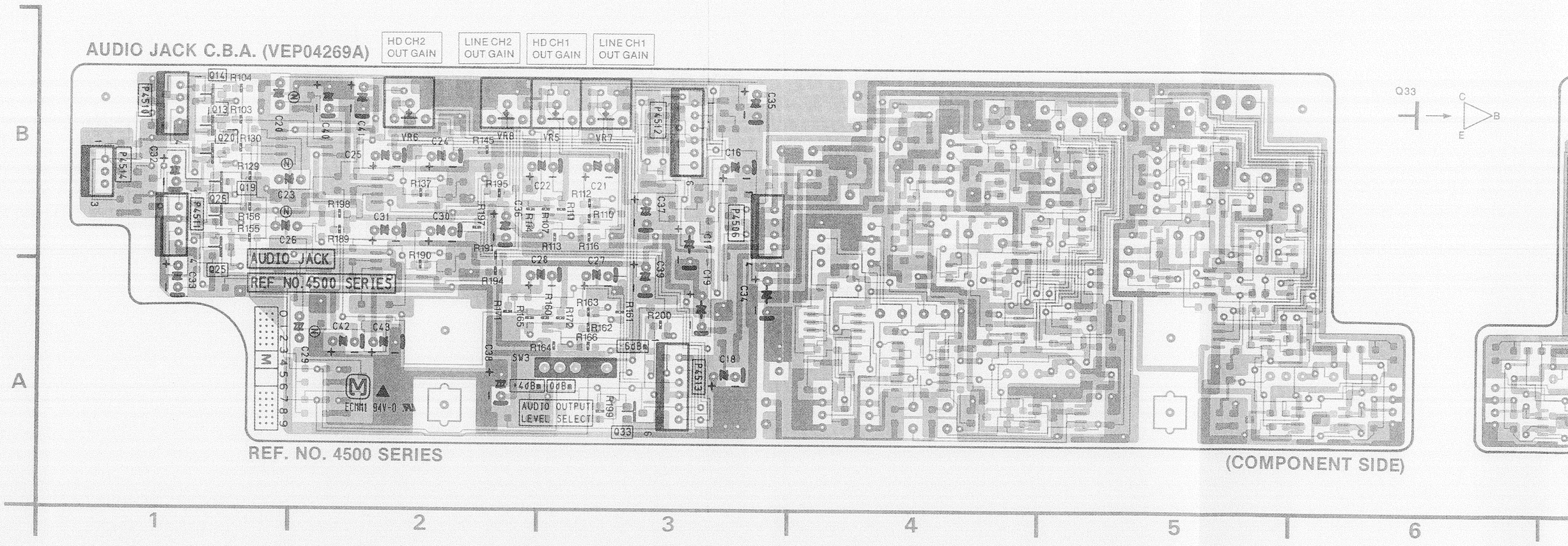

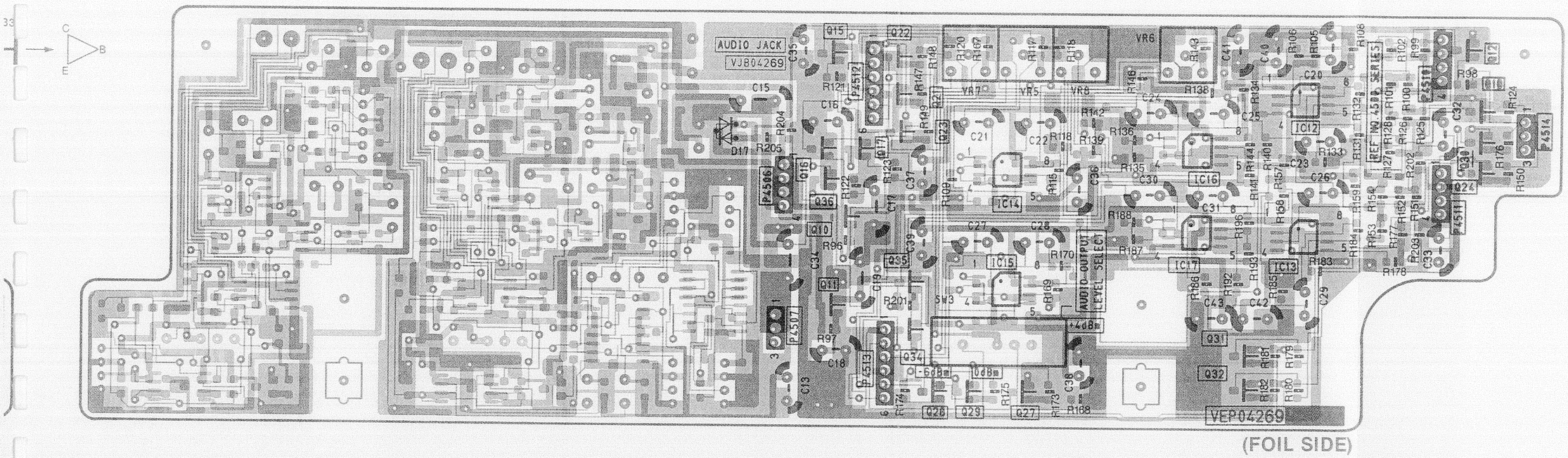

AUDIO JACK C.B.A.		
Transistor		
Q4510	A-9	F
Q4511	A-9	F
Q4512	B-11	F
Q4513	B-1	C
Q4514	B-1	C
Q4515	B-9	F
Q4516	B-9	F
Q4517	B-9	F
Q4518	B-11	F
Q4519	B-1	C
Q4520	B-1	C
Q4521	B-9	F
Q4522	B-9	F
Q4523	B-9	F
Q4524	B-11	F
Q4525	A-1	C
Q4526	B-1	C
Q4527	A-10	F
Q4528	A-9	F
Q4529	A-10	F
Q4530	B-11	F
Q4531	A-10	F
Q4532	A-10	F
Q4533	A-3	C
Q4534	A-9	F
Q4535	A-9	F
Q4536	B-9	F
Integrated Circuit		
IC4512	B-11	F
IC4513	A-11	F
IC4514	B-10	F
IC4515	A-10	F
IC4516	B-10	F
IC4517	A-10	F
Adjustment		
VR4505	B-3	C
VR4506	B-2	C
VR4507	B-3	C
VR4508	B-2	C
Connector		
P4506	B-3	C
P4510	B-1	C
P4511	B-1	C
P4512	B-3	C
P4513	A-3	C
P4514	B-1	C

ADDRESS INFORMATION
C ··· COMPONENT SIDE
F ··· FOIL SIDE

AUDIO JACK SCHEMATIC DIAGRAM

HD AUDIO SIGNAL PATH

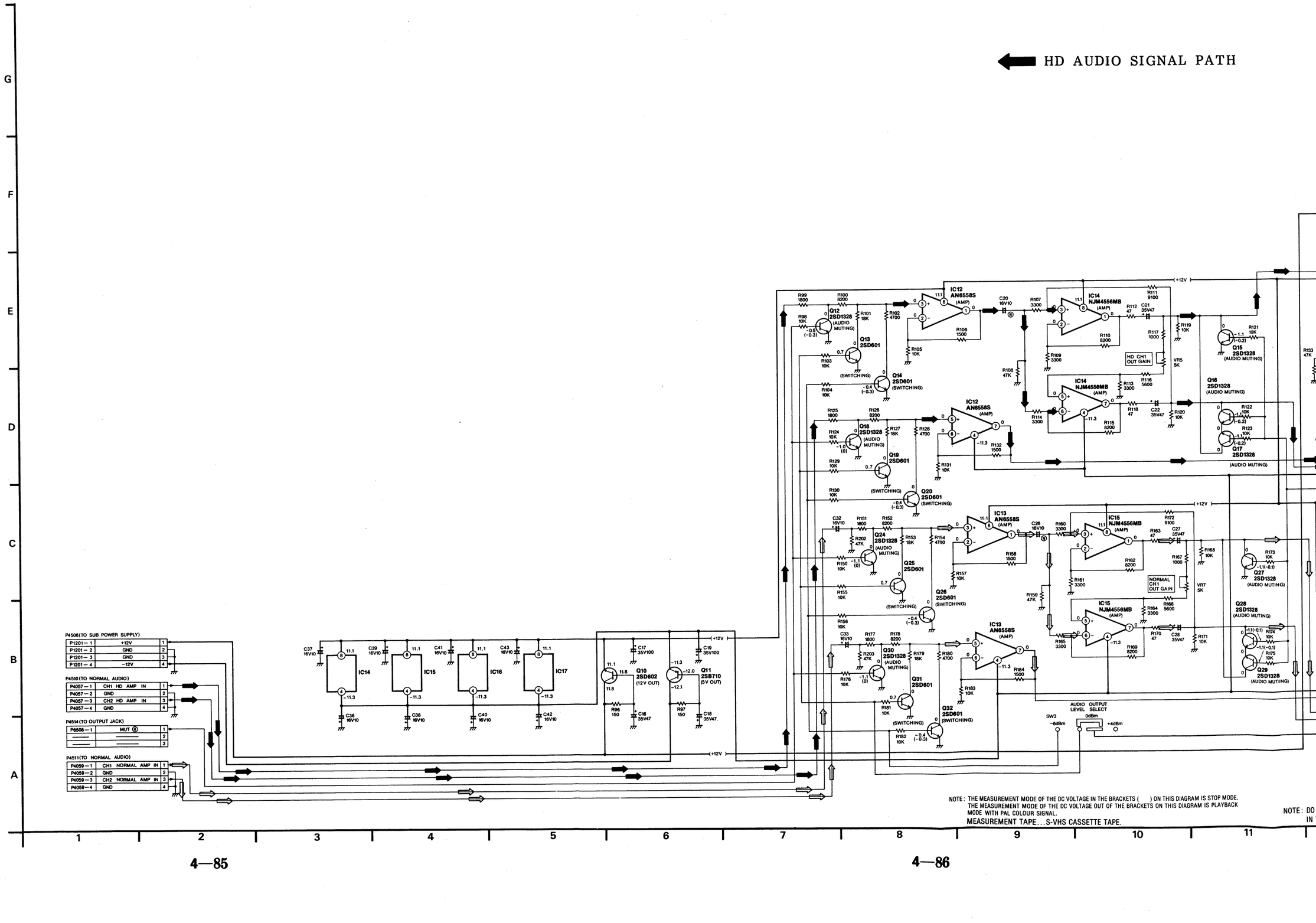

NOTE: THE MEASUREMENT MODE OF THE DC VOLTAGE IN THE BRACKETS ( ) ON THIS DIAGRAM IS STOP MODE.
THE MEASUREMENT MODE OF THE DC VOLTAGE OUT OF THE BRACKETS ON THIS DIAGRAM IS PLAYBACK MODE WITH PAL COLOUR SIGNAL.
MEASUREMENT TAPE...S-VHS CASSETTE TAPE.

NOTE: DO
IN

HD AUDIO SIGNAL PATH

NORMAL AUDIO SIGNAL PATH

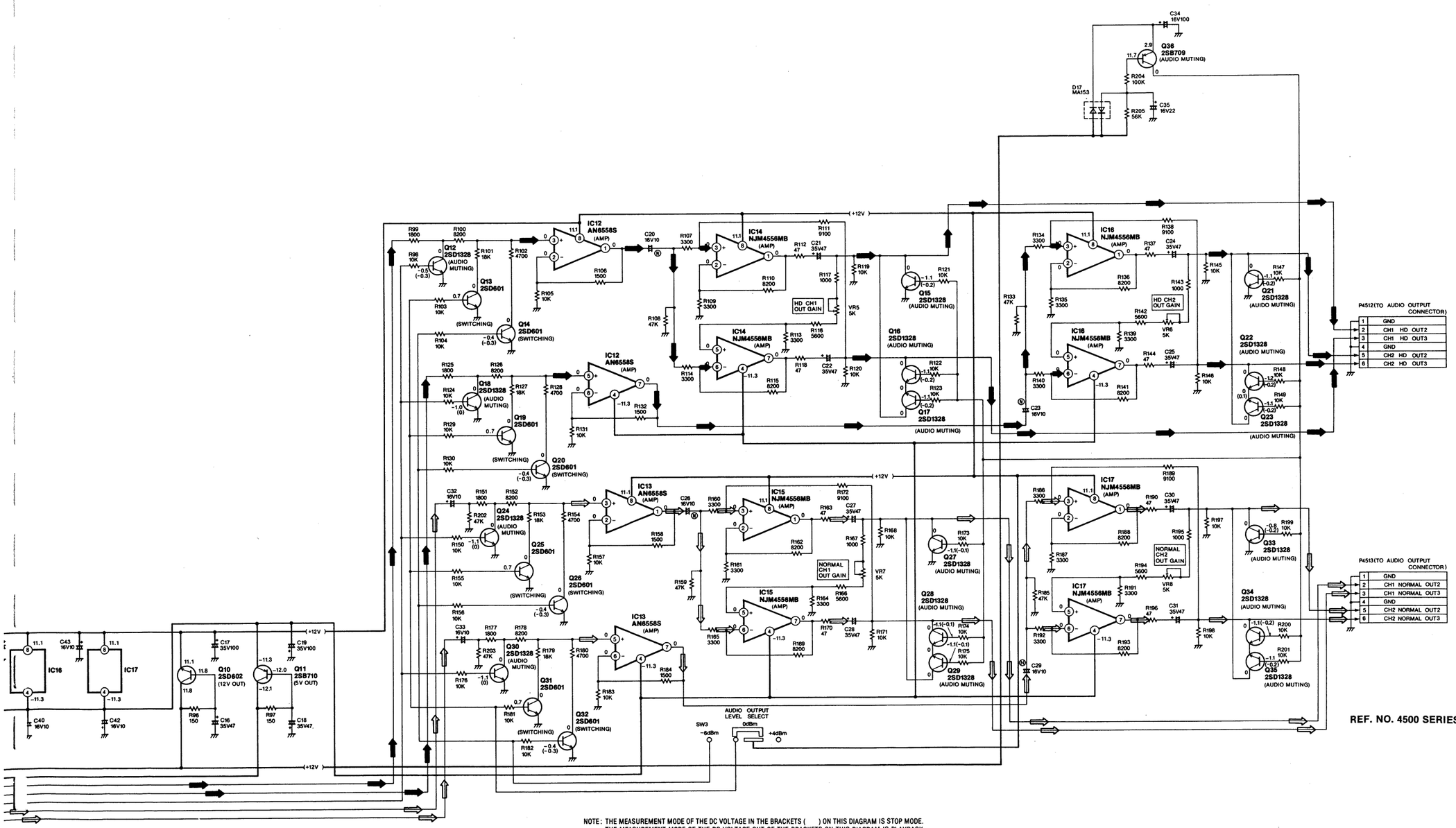

NOTE: THE MEASUREMENT MODE OF THE DC VOLTAGE IN THE BRACKETS ( ) ON THIS DIAGRAM IS STOP MODE.
THE MEASUREMENT MODE OF THE DC VOLTAGE OUT OF THE BRACKETS ON THIS DIAGRAM IS PLAYBACK MODE WITH PAL COLOUR SIGNAL.
MEASUREMENT TAPE...S-VHS CASSETTE TAPE.

NOTE: DO NOT USE THE PART NUMBER SHOWN ON THIS DRAWING FOR ORDERING. THE CORRECT PART NUMBER IS SHOWN IN THE PARTS LIST, AND MAY BE SLIGHTLY DIFFERENT OR AMENDED SINCE THIS DRAWING WAS PREPARED.

REF. NO. 4500 SERIES

KEY BOARD SCHEMATIC DIAGRAM

IMPORTANT SAFETY NOTICE:
COMPONENTS IDENTIFIED WITH THE MARK ⚠ HAVE THE SPECIAL CHARACTERISTICS FO
WHEN REPLACING ANY OF THESE COMPONENTS, USE ONLY THE SAME TYPE.

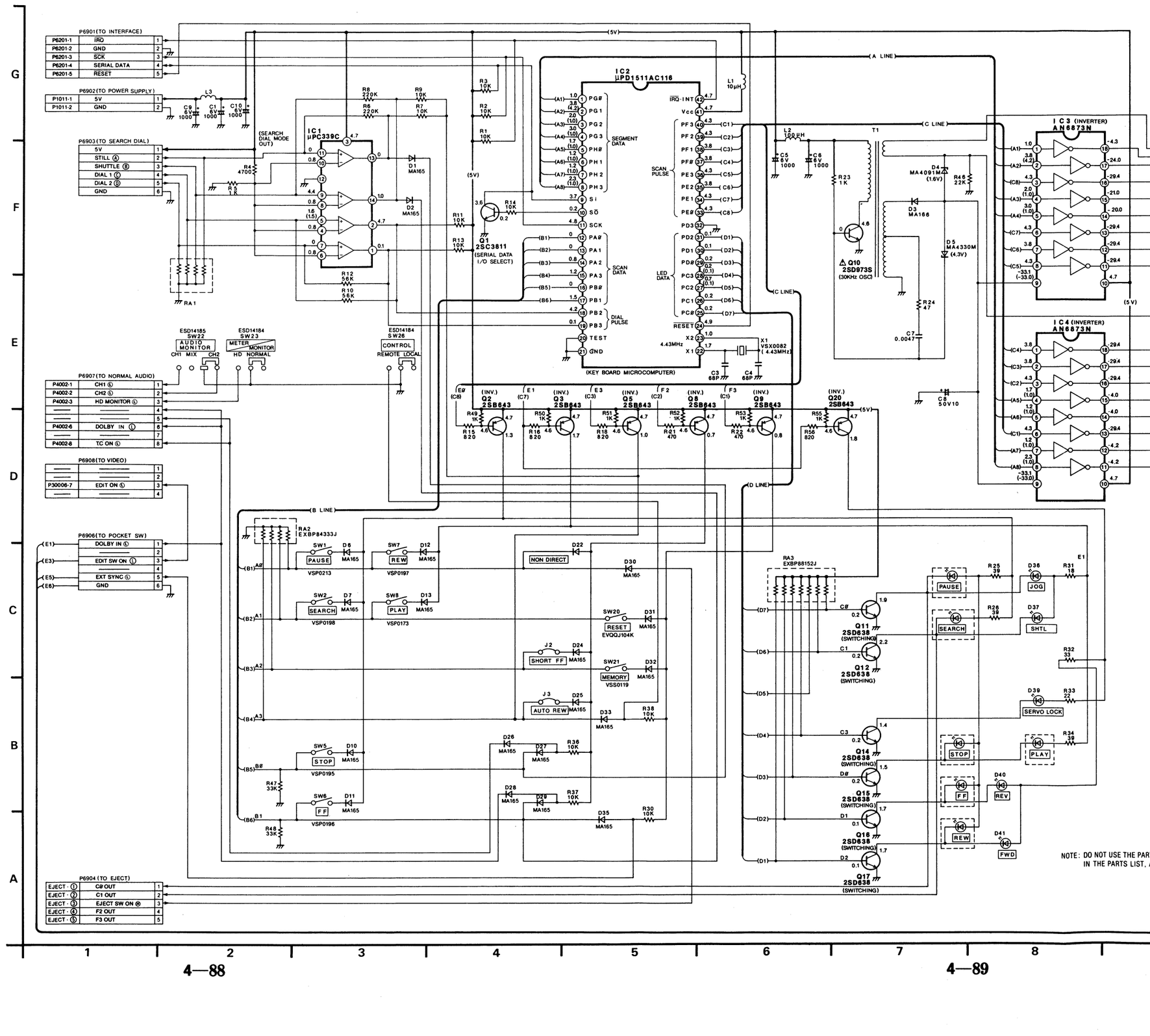

			E PORT			F PORT	
			E 0	E 1	E 3	F 2	F
OUTPUT	C PORT	C 0	PAUSE	JOG	——	T C	AU OF
		C 1	SEARCH	SHUTTLE	——	DOLBY	HD
		C 2	——	FRAME ON	——	——	
		C 3	——	SERVO LOCK	——	——	
	D PORT	D 0	STOP	PLAY	——	——	
		D 1	FF	REV	——	——	
		D 2	REW	FWD	——	——	
INPUT	A PORT	A 0	PAUSE	REW	——	SEARCH DIRECT:Ⓗ	EJ ON
		A 1	SEARCH	PLAY	——	SERVO DETECT ON:Ⓦ	RE
		A 2	——	——	——	SHORT FF ON:Ⓗ	RE
		A 3	——	——	——	AUTO REW ON:Ⓗ	RE
	B PORT	B 0	STOP	——	STILL:Ⓘ	TC:Ⓘ	
		B 1	FF	——	SHUTTLE Ⓜ	DOLBY:Ⓛ	EX

NOTE: DO NOT USE THE PART NUMBER SHOWN ON THIS DRAWING FOR ORDERING. THE CORRECT PART NUMBER IS SHOWN IN THE PARTS LIST, AND MAY BE SLIGHTLY DIFFERENT OR AMENDED SINCE THIS DRAWING WAS PREPARED.

REF. NO. 6900 SERIE

IMPORTANT SAFETY NOTICE:
COMPONENTS IDENTIFIED WITH THE MARK ⚠ HAVE THE SPECIAL CHARACTERISTICS FOR SAFETY.
WHEN REPLACING ANY OF THESE COMPONENTS, USE ONLY THE SAME TYPE.

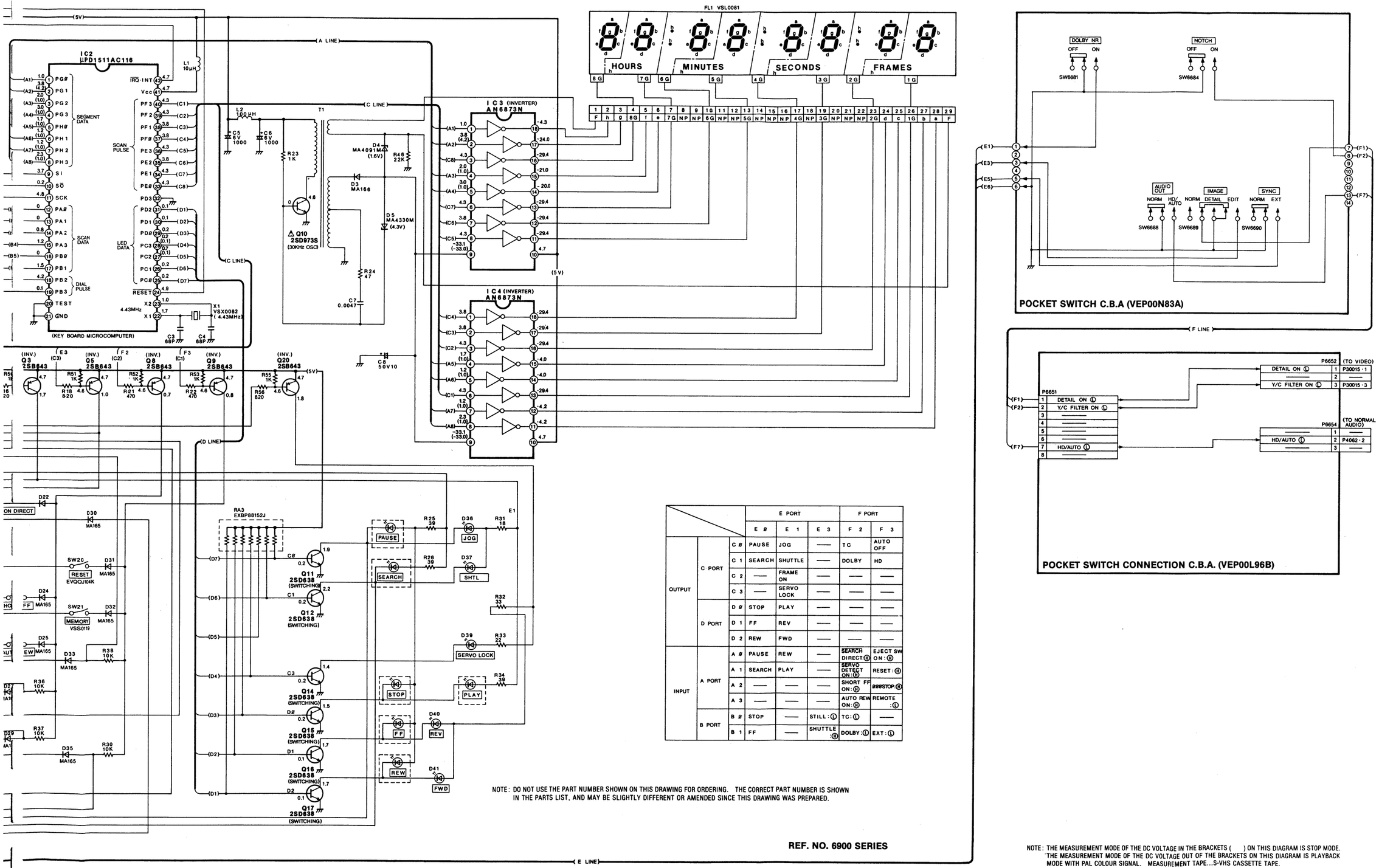

			E PORT			F PORT	
			E 0	E 1	E 3	F 2	F 3
OUTPUT	C PORT	C 0	PAUSE	JOG	—	TC	AUTO OFF
		C 1	SEARCH	SHUTTLE	—	DOLBY	HD
		C 2	—	FRAME ON	—	—	—
		C 3	—	SERVO LOCK	—	—	—
	D PORT	D 0	STOP	PLAY	—	—	—
		D 1	FF	REV	—	—	—
		D 2	REW	FWD	—	—	—
INPUT	A PORT	A 0	PAUSE	REW	—	SEARCH DIRECT:Ⓗ	EJECT SW ON:Ⓗ
		A 1	SEARCH	PLAY	—	SERVO DETECT ON:Ⓗ	RESET:Ⓗ
		A 2	—	—	—	SHORT FF ON:Ⓗ	###STOP:Ⓗ
		A 3	—	—	—	AUTO REW ON:Ⓗ	REMOTE :Ⓛ
	B PORT	B 0	STOP	—	STILL:Ⓛ	TC:Ⓛ	—
		B 1	FF	—	SHUTTLE :Ⓗ	DOLBY:Ⓛ	EXT:Ⓛ

NOTE: DO NOT USE THE PART NUMBER SHOWN ON THIS DRAWING FOR ORDERING. THE CORRECT PART NUMBER IS SHOWN IN THE PARTS LIST, AND MAY BE SLIGHTLY DIFFERENT OR AMENDED SINCE THIS DRAWING WAS PREPARED.

NOTE: THE MEASUREMENT MODE OF THE DC VOLTAGE IN THE BRACKETS ( ) ON THIS DIAGRAM IS STOP MODE.
THE MEASUREMENT MODE OF THE DC VOLTAGE OUT OF THE BRACKETS ON THIS DIAGRAM IS PLAYBACK MODE WITH PAL COLOUR SIGNAL. MEASUREMENT TAPE...S-VHS CASSETTE TAPE.

REF. NO. 6900 SERIES

5 6 7 8 9 10 11 12 13 14 15

KEY BOARD C.B.A. (VEP06565A)

POCKET SWITCH CONNECTION
C.B.A. (VEP00L96B)

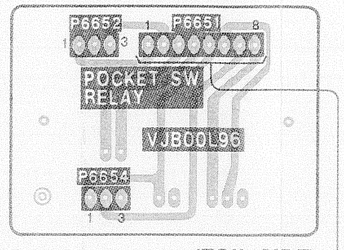

EJECT C.B.A. (VEP00J60A)

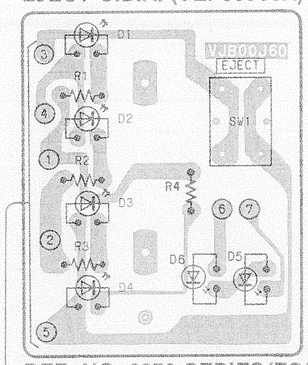

KEY BOARD C.B.A. (VEP06565A)

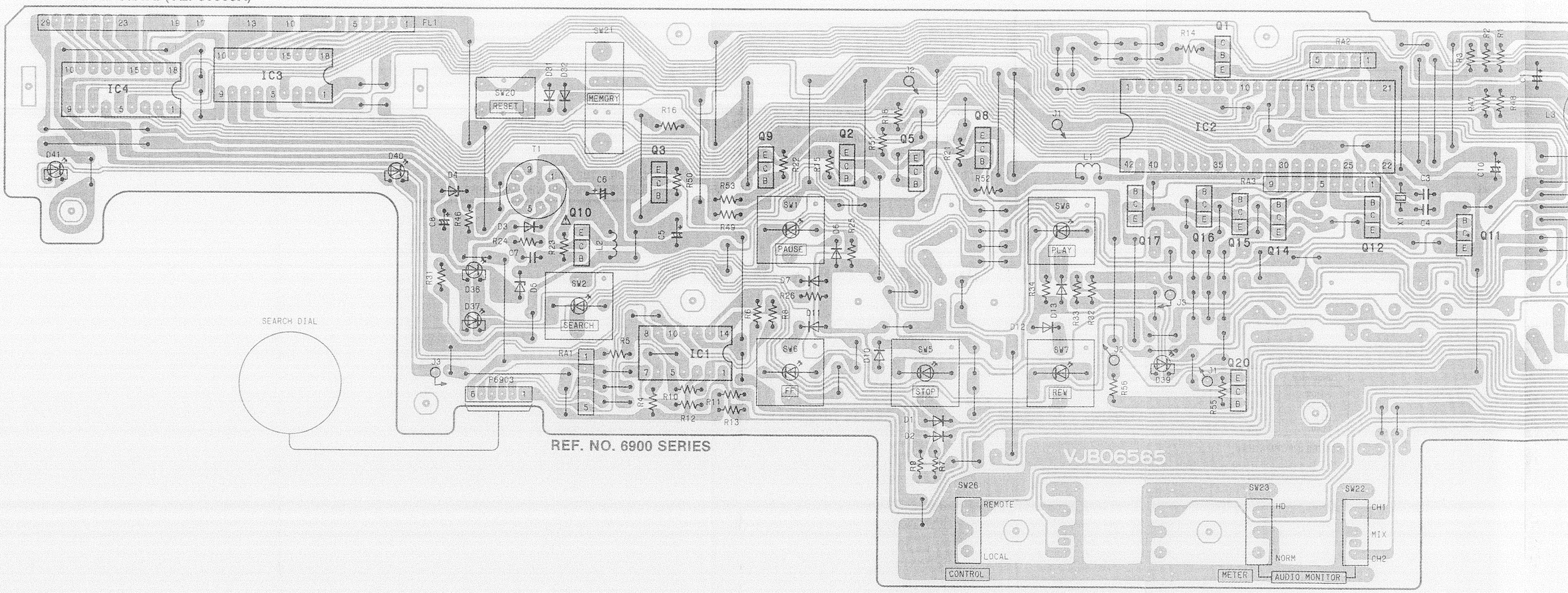

POCKET SWITCH CONNECTION
C.B.A. (VEP00L96B)

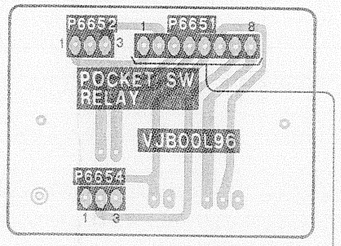

EJECT C.B.A. (VEP00J60A)

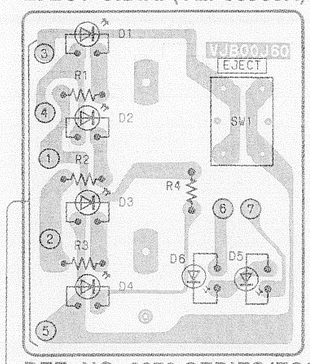

POCKET SWITCH C.B.A. (VEP00N83A)

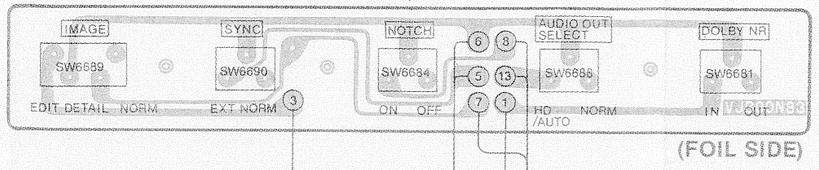

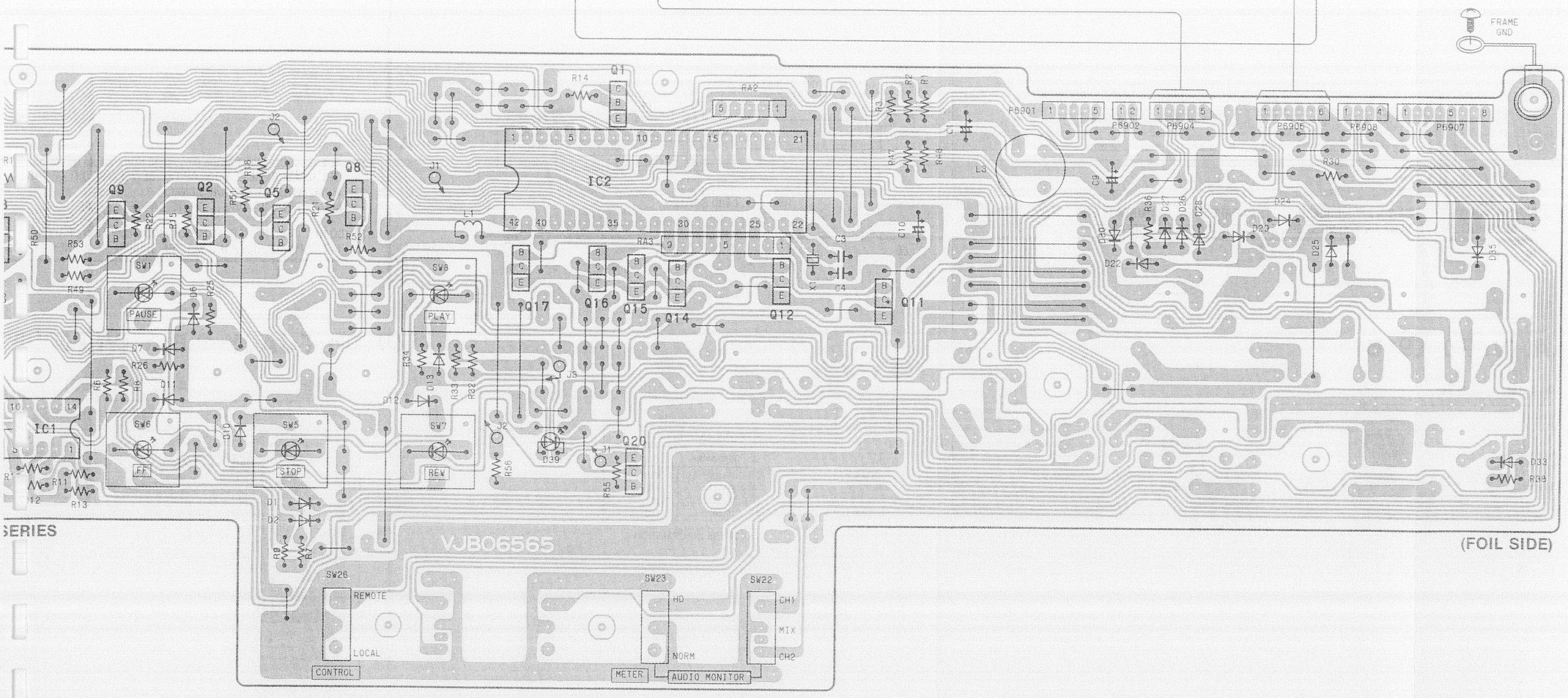

KEY BOARD C.B.A.	
Transistor	
Q6902	C-5
Q6903	C-4
Q6905	C-5
Q6908	C-5
Q6909	C-4
Q6910	B-4
Q6911	B-8
Q6912	B-7
Q6914	B-7
Q6915	B-7
Q6916	C-7
Q6917	C-6
Q6920	B-7
Integrated Circuit	
IC6901	B-4
IC6902	C-7
IC6903	C-2
IC6904	C-1
Connector	
P6901	C-9
P6902	C-9
P6903	B-3
P6904	C-9
P6906	C-10
P6907	C-10
P6908	C-10

ADDRESS INFORMATION

INPUT JACK SCHEMATIC DIAGRAM

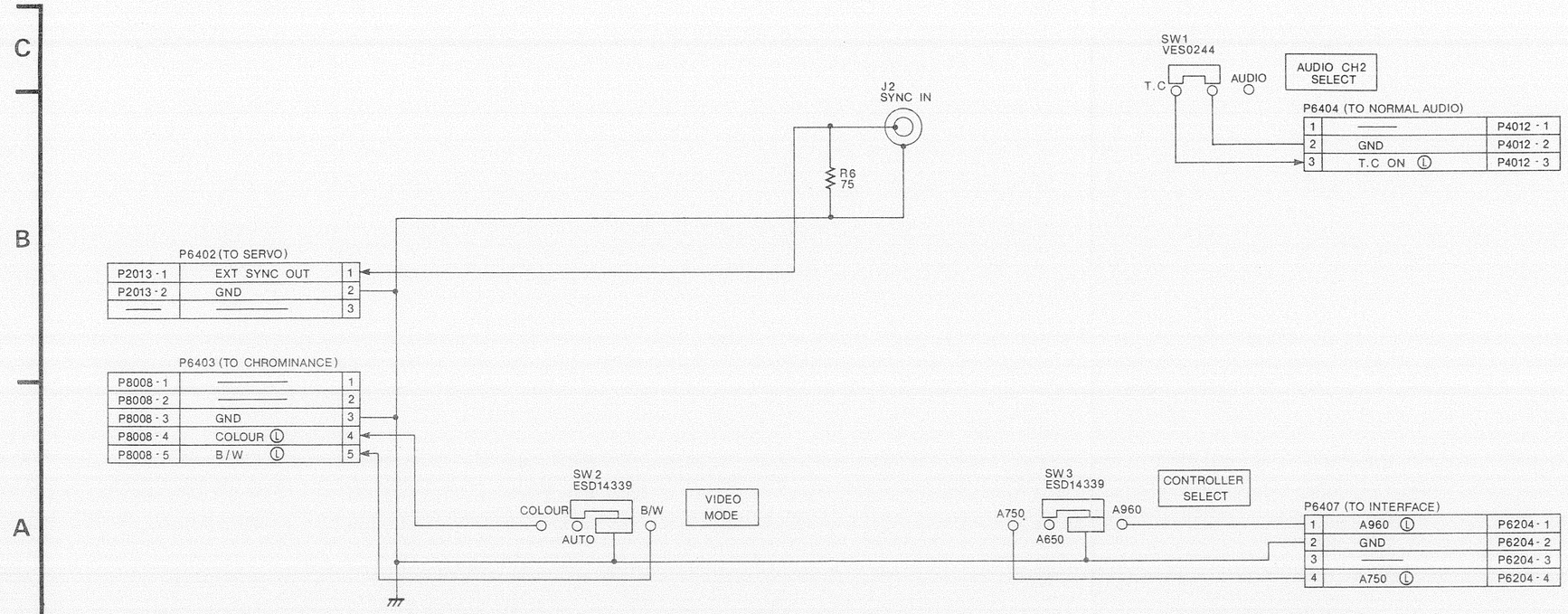

REF NO. 6400 SERIES

NOTE: DO NOT USE THE PART NUMBER SHOWN ON THIS DRAWING FOR ORDERING. THE CORRECT PART NUMBER IS SHOWN IN THE PARTS LIST, AND MAY BE SLIGHTLY DIFFERENT OR AMENDED SINCE THIS DRAWING WAS PREPARED.

OUTPUT JACK SCHEMATIC DIAGRAM

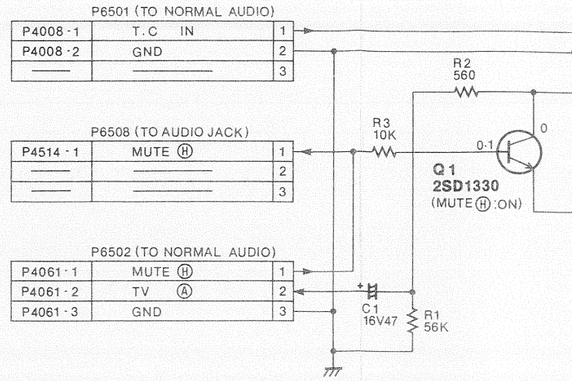

NOTE: THE MEASUREMENT MODE OF THE DC VOLTAGE IN THE BRACKETS ( ) ON TH
THE MEASUREMENT MODE OF THE DC VOLTAGE OUT OF THE BRACKETS ON T
MODE WITH PAL COLOUR SIGNAL.
MEASUREMENT TAPE...S-VHS CASSETTE TAPE.

NOTE: DO NOT USE THE PART NUMBER SHOWN ON THIS DRAWING FOR ORDERING.
IN THE PARTS LIST, AND MAY BE SLIGHTLY DIFFERENT OR AMENDED SINC

INPUT JACK C.B.A. (VEP00L91B)

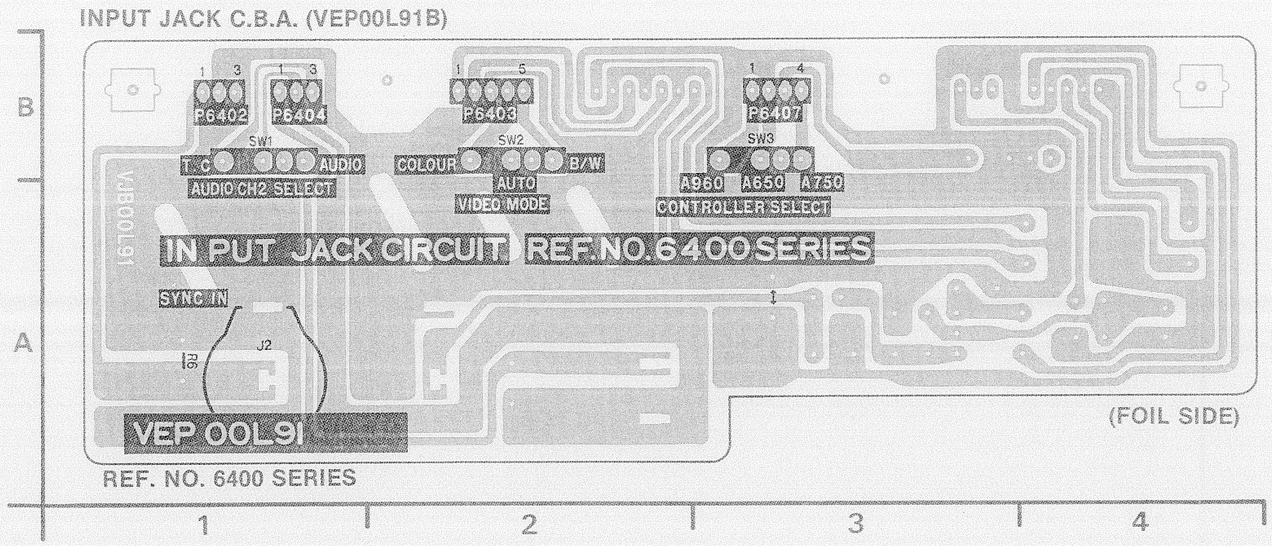

INPUT JACK C.B.A.	
Connector	
P6402	B-1
P6403	B-2
P6404	B-1
P6407	B-3

ADDRESS INFORMATION

OUTPUT JACK C.B.A. (VEP00L92B)

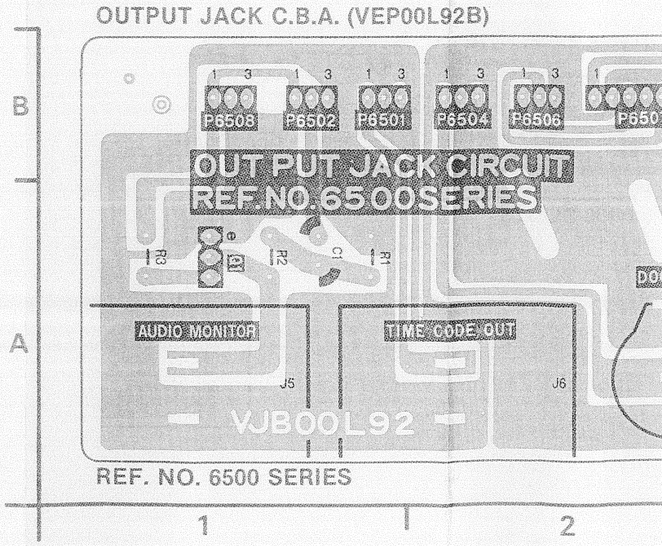

OUTPUT JACK SCHEMATIC DIAGRAM

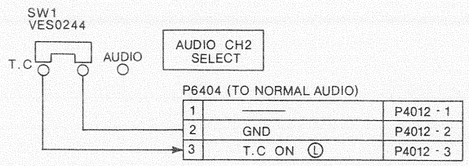

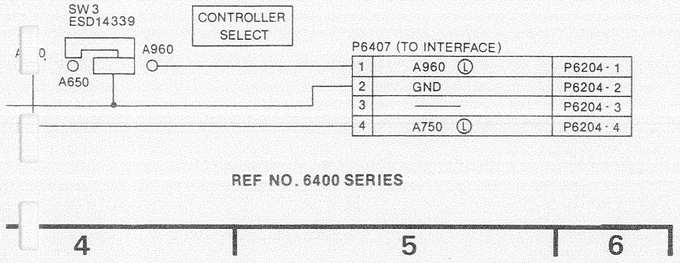

REF NO. 6400 SERIES

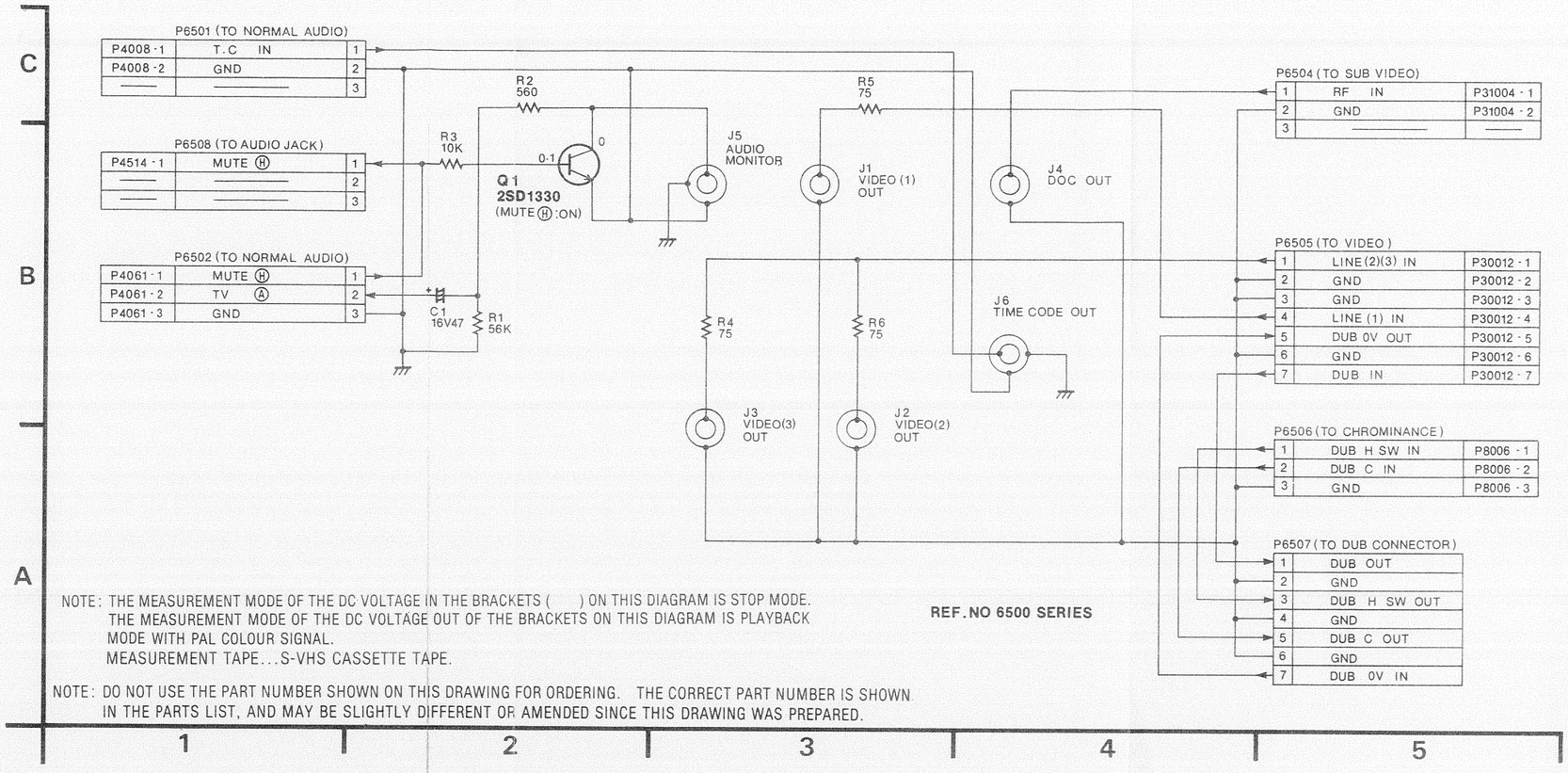

REF.NO 6500 SERIES

NOTE: THE MEASUREMENT MODE OF THE DC VOLTAGE IN THE BRACKETS ( ) ON THIS DIAGRAM IS STOP MODE.
THE MEASUREMENT MODE OF THE DC VOLTAGE OUT OF THE BRACKETS ON THIS DIAGRAM IS PLAYBACK MODE WITH PAL COLOUR SIGNAL.
MEASUREMENT TAPE...S-VHS CASSETTE TAPE.

NOTE: DO NOT USE THE PART NUMBER SHOWN ON THIS DRAWING FOR ORDERING. THE CORRECT PART NUMBER IS SHOWN IN THE PARTS LIST, AND MAY BE SLIGHTLY DIFFERENT OR AMENDED SINCE THIS DRAWING WAS PREPARED.

OUTPUT JACK C.B.A. (VEP00L92B)

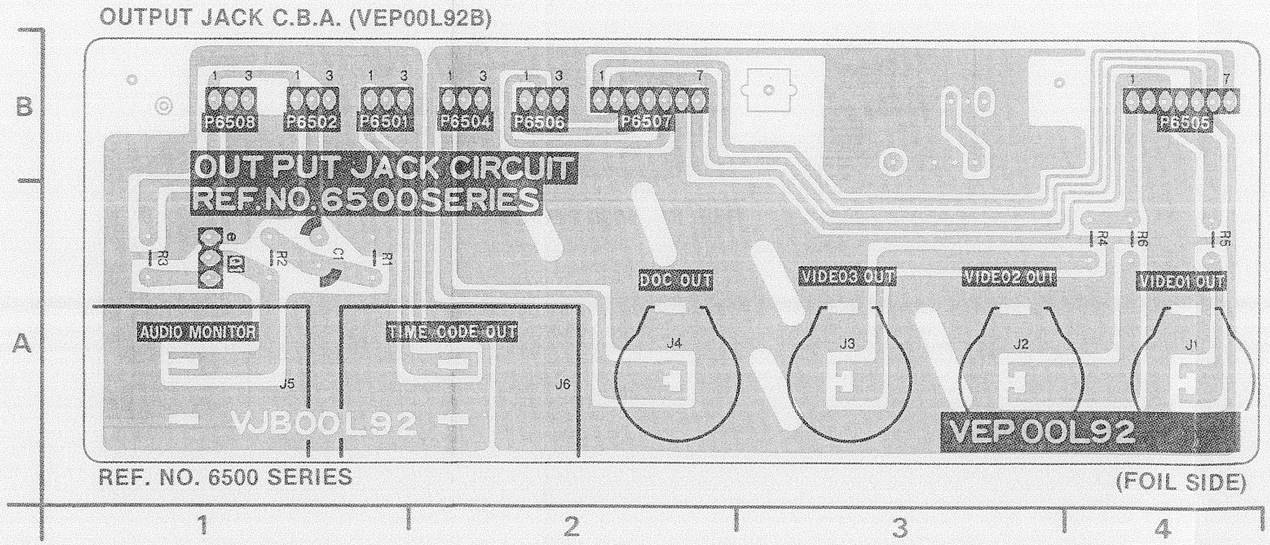

OUTPUT JACK C.B.A.	
Transistor	
Q6501	A-1
Connector	
P6501	B-1
P6502	B-1
P6504	B-2
P6505	B-4
P6506	B-2
P6507	B-2
P6508	B-1

ADDRESS INFORMATION

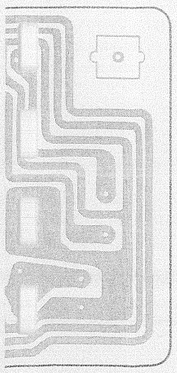

INPUT JACK C.B.A.	
Connector	
P6402	B-1
P6403	B-2
P6404	B-1
P6407	B-3

ADDRESS INFORMATION

INTERCONNECTION SCHEMATIC DIAGRAM

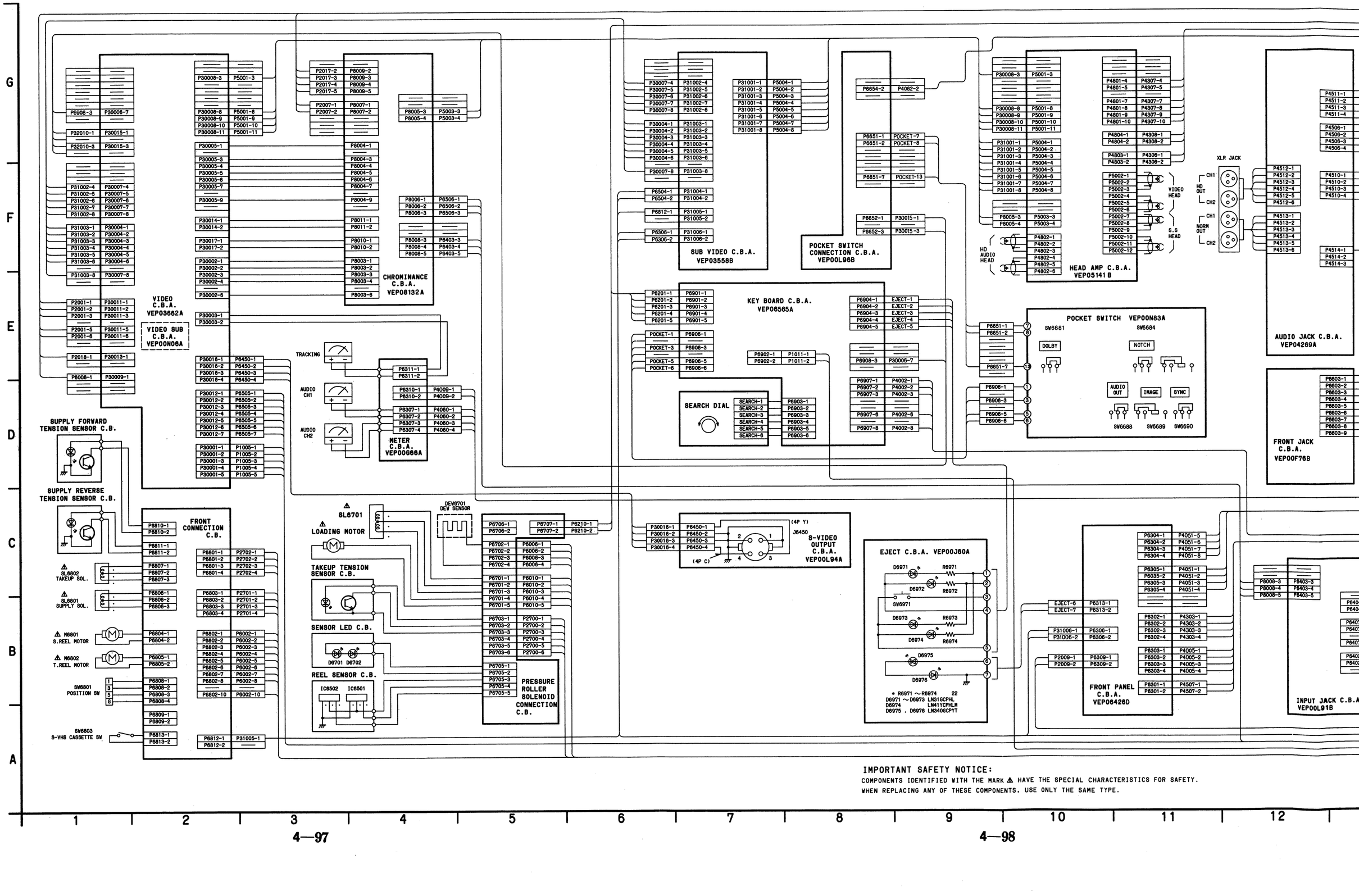

IMPORTANT SAFETY NOTICE:

COMPONENTS IDENTIFIED WITH THE MARK ⚠ HAVE THE SPECIAL CHARACTERISTICS FOR SAFETY.
WHEN REPLACING ANY OF THESE COMPONENTS. USE ONLY THE SAME TYPE.

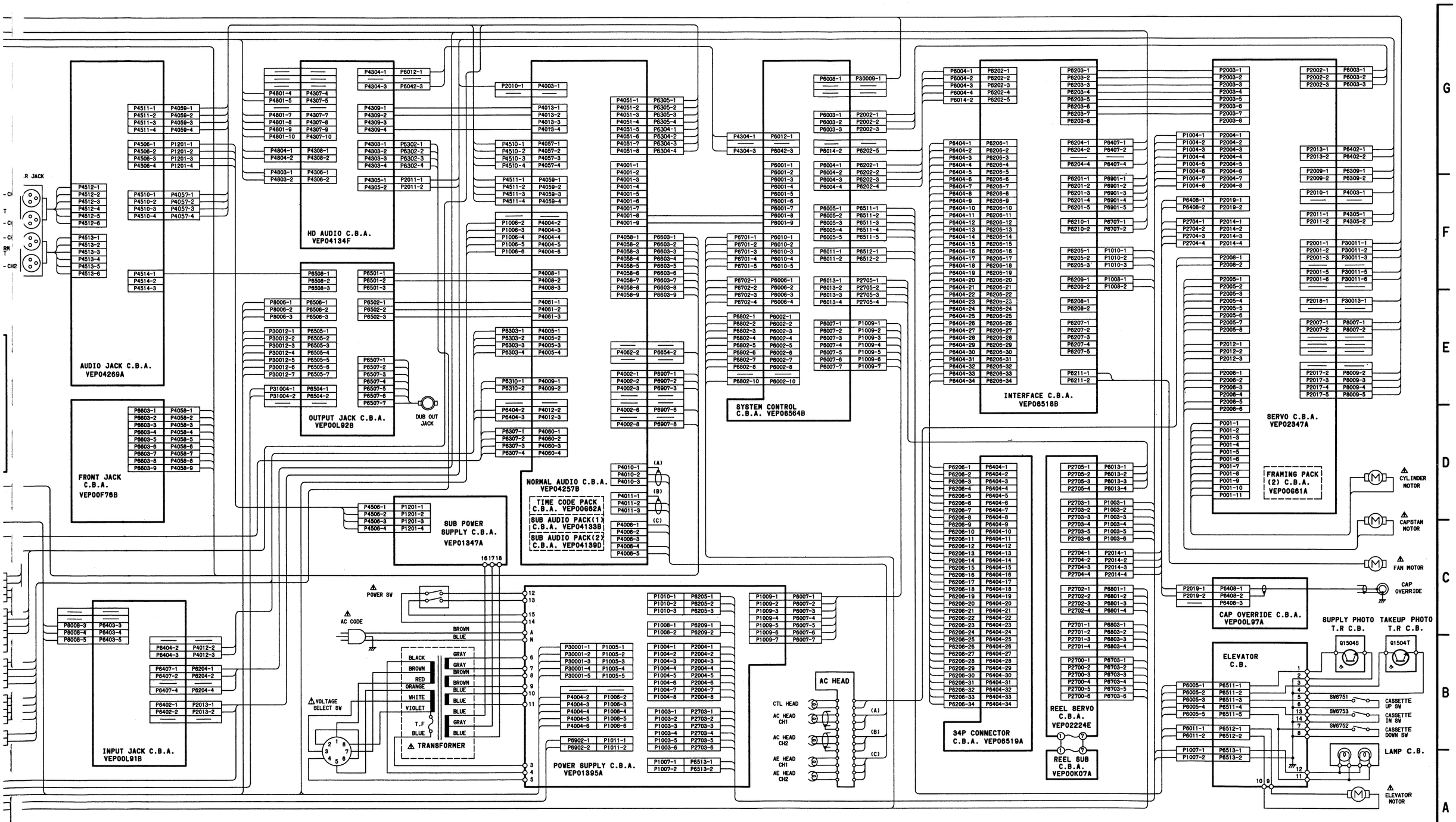

NOTE: DO NOT USE THE PART NUMBER SHOWN ON THIS DRAWING FOR ORDERING.THE CORRECT PART NUMBER IS SHOWN IN THE PARTS LIST. AND MAY BE SLIGHTLY DIFFERENT OR AMENDED SINCE THIS DRAWING WAS PREPARED.

EXPLODED VIEWS

❶ *Transport Section*

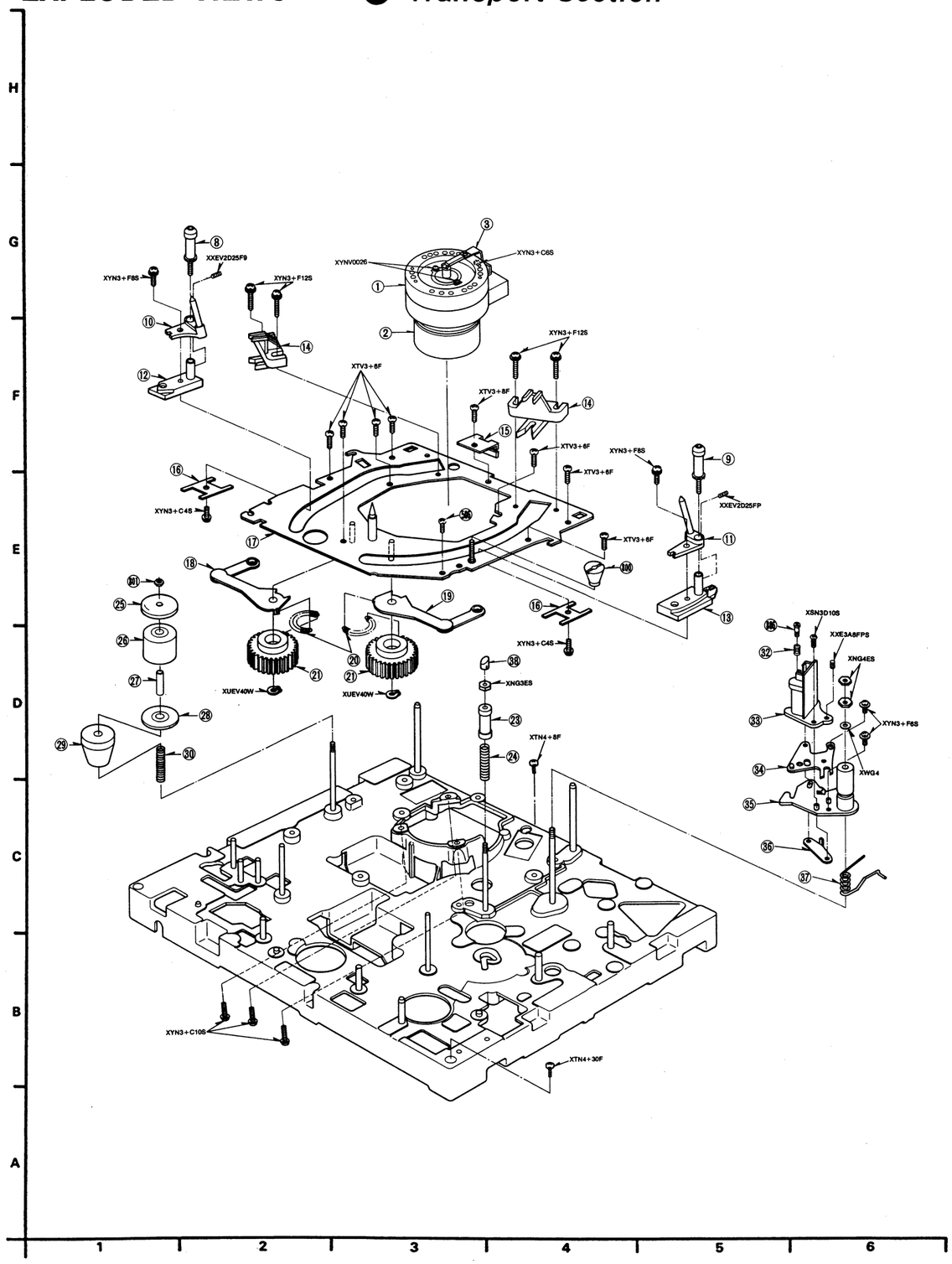

❷ *Moving Mechanism Section-(1)*

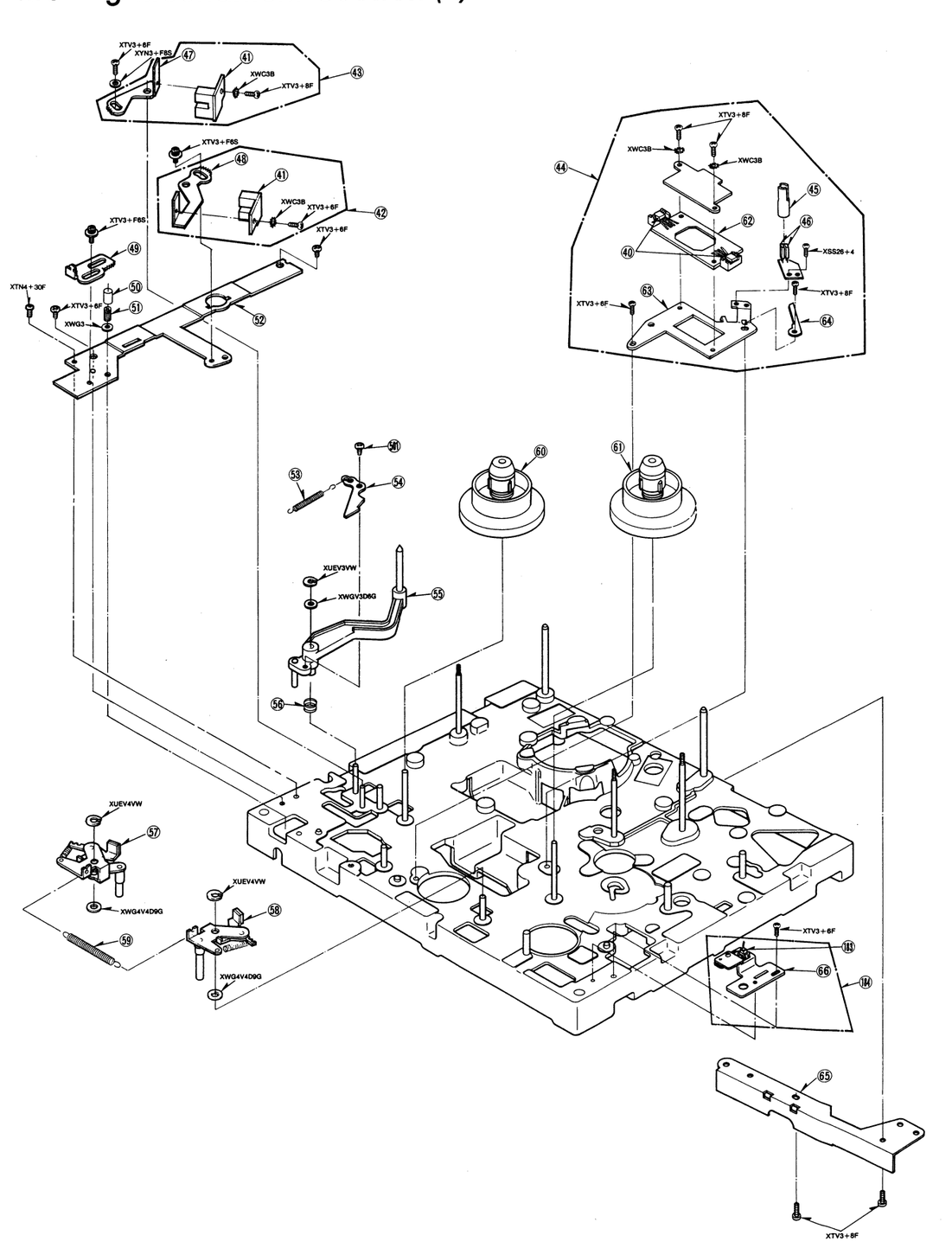

❸ *Chassis Parts Section*

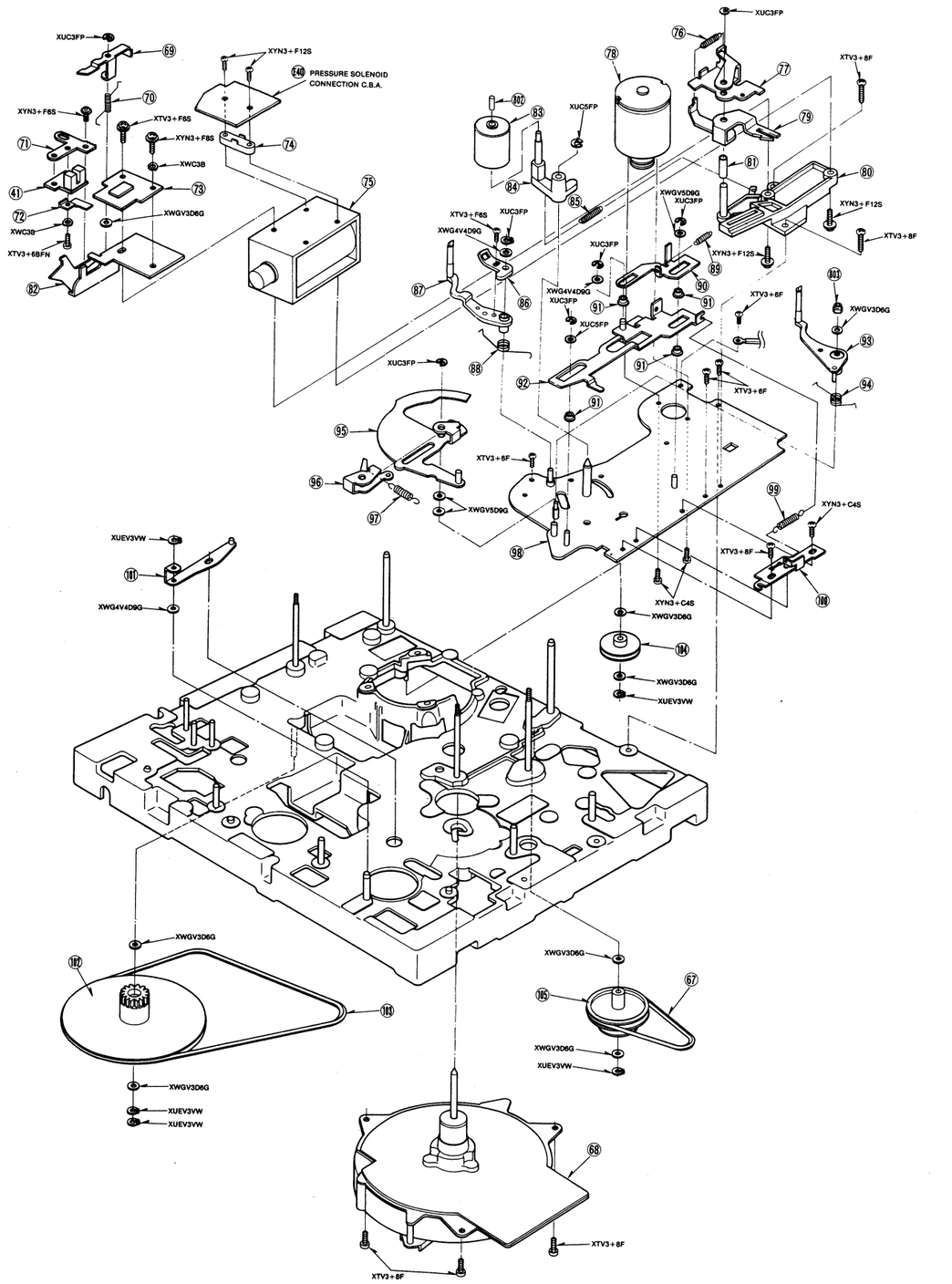

5—3

❹ *Moving Mechanism Section-(2)*

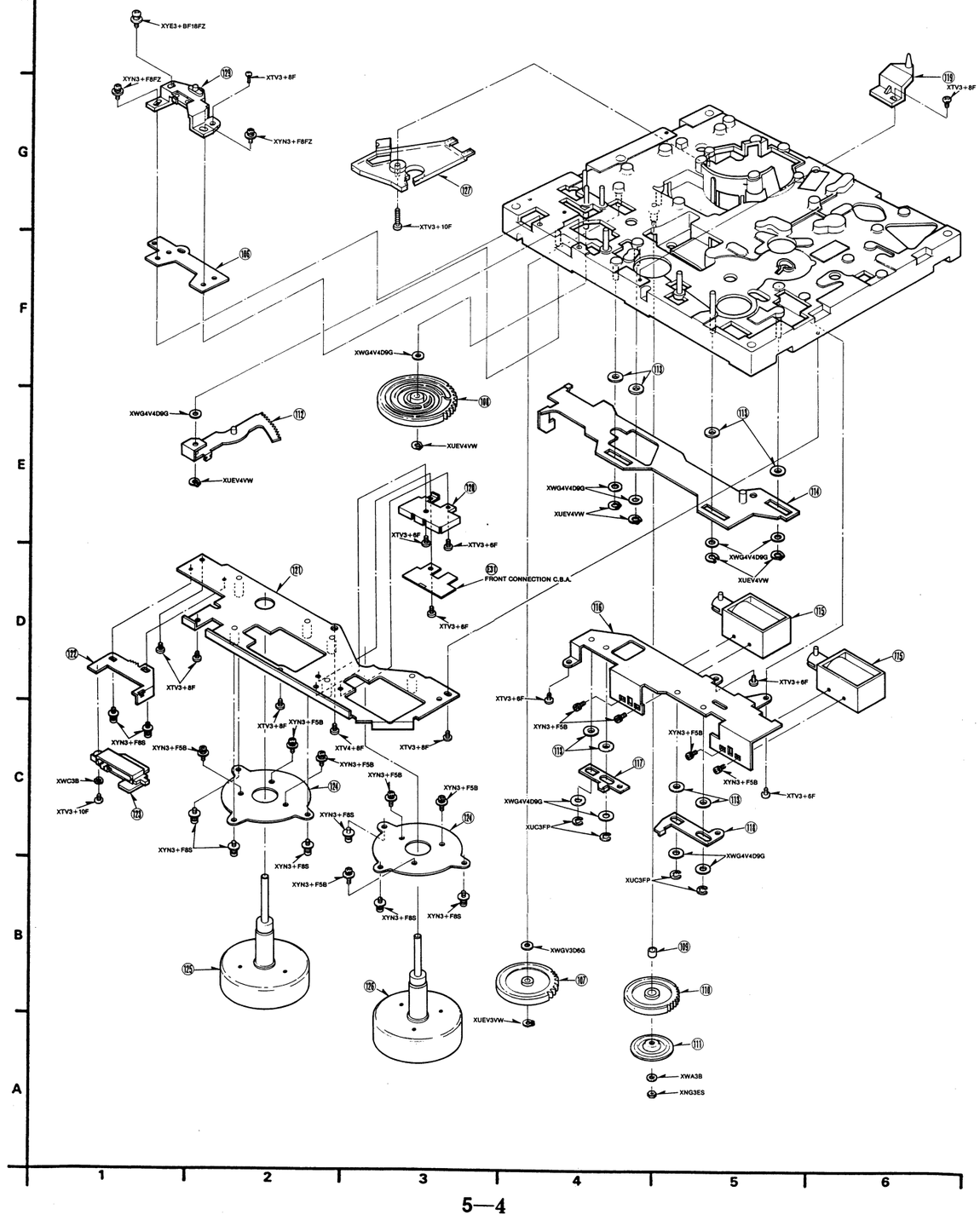

5—4

5 Front Loading Mechanism Section

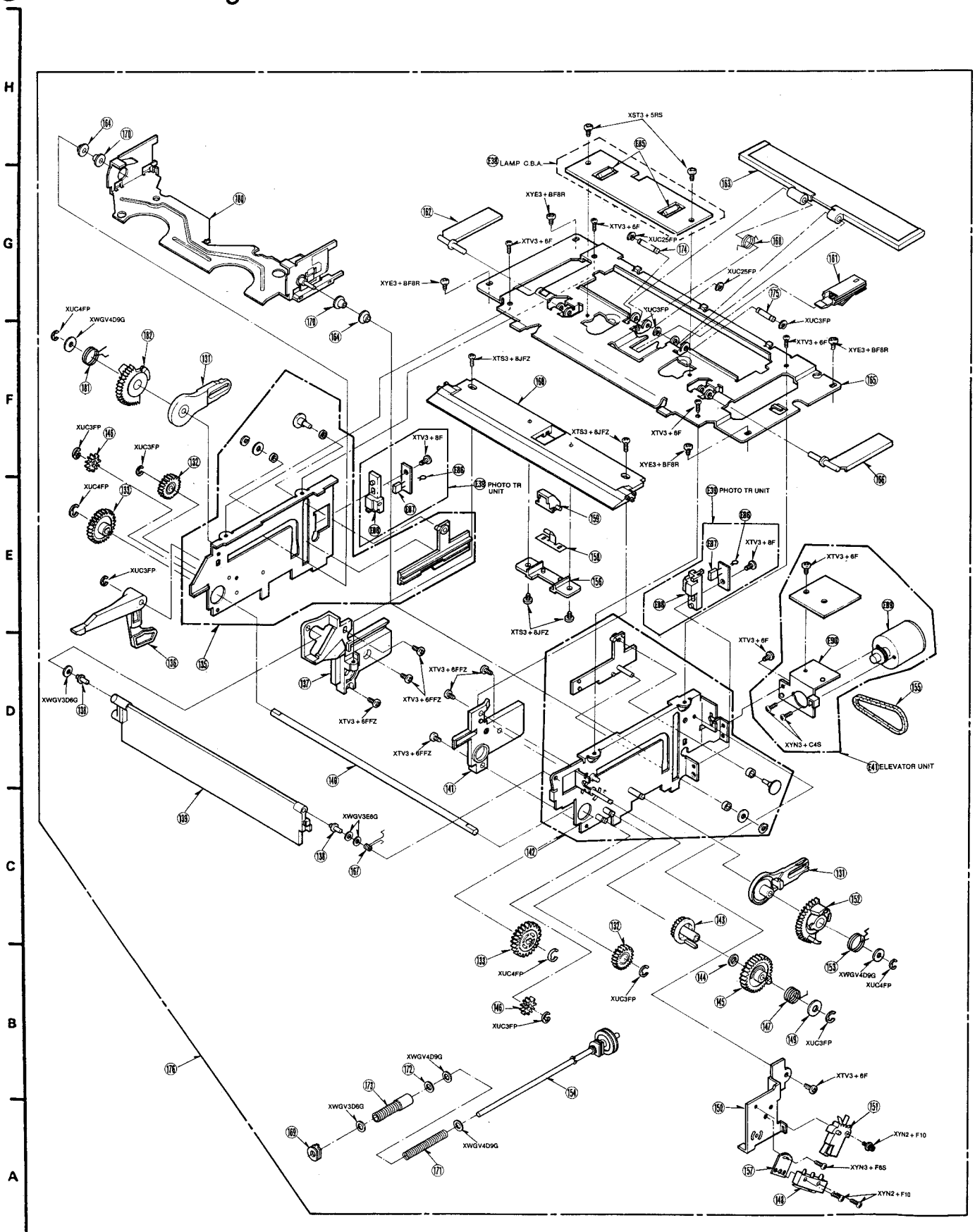

6 Chassis Frame Section-(1)

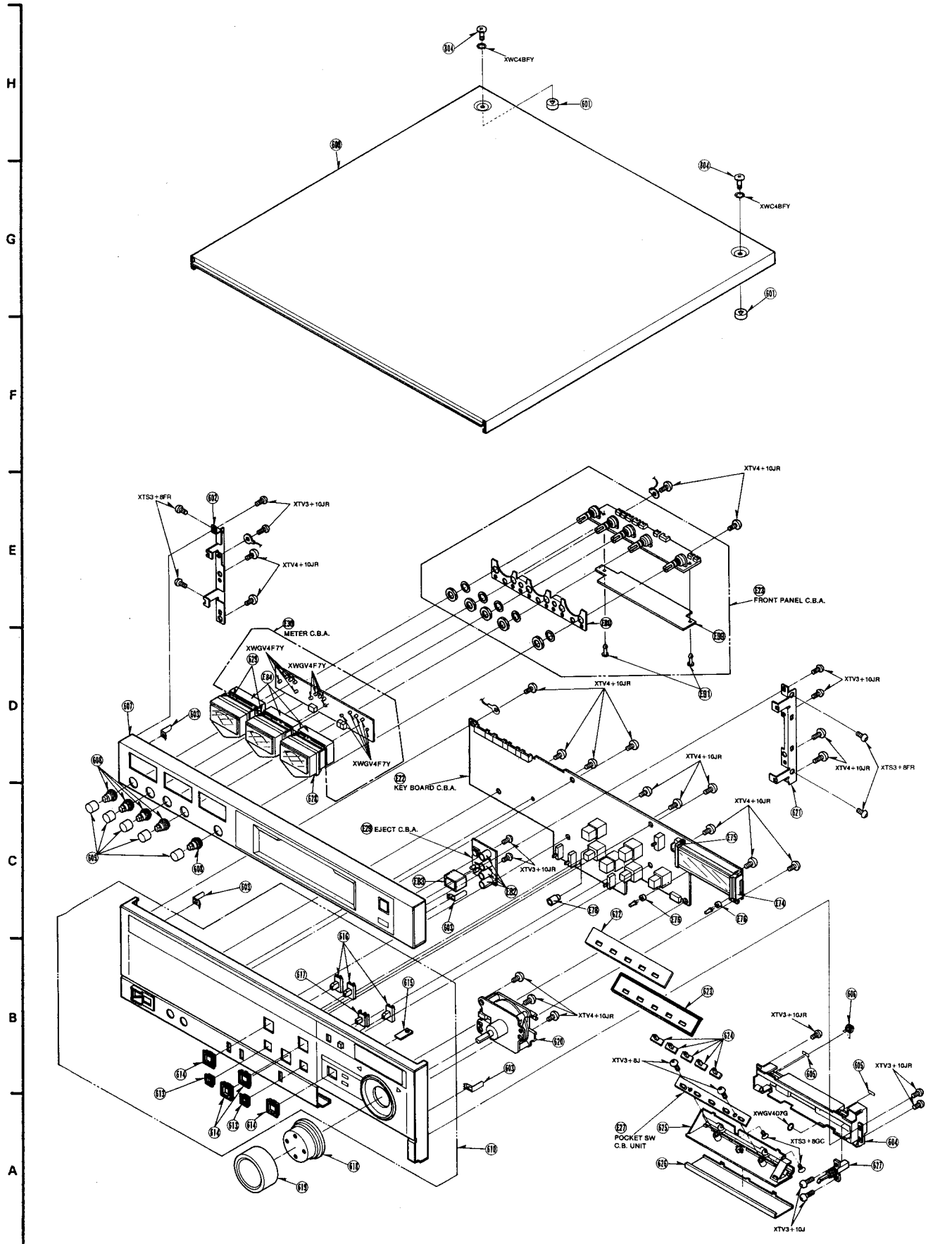

❼ *Chassis Frame Section-(2)*

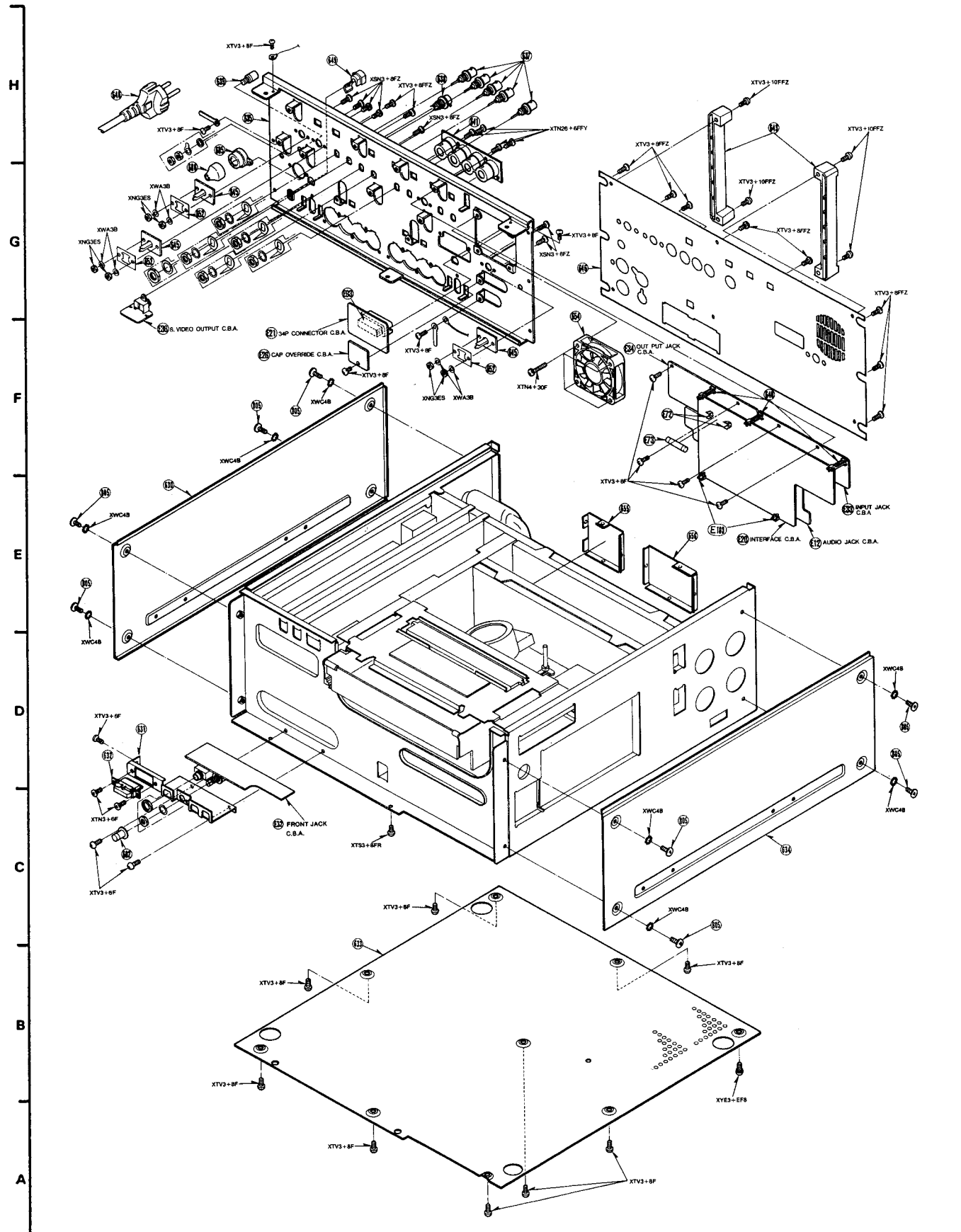

8 Casing Parts Section-(1)

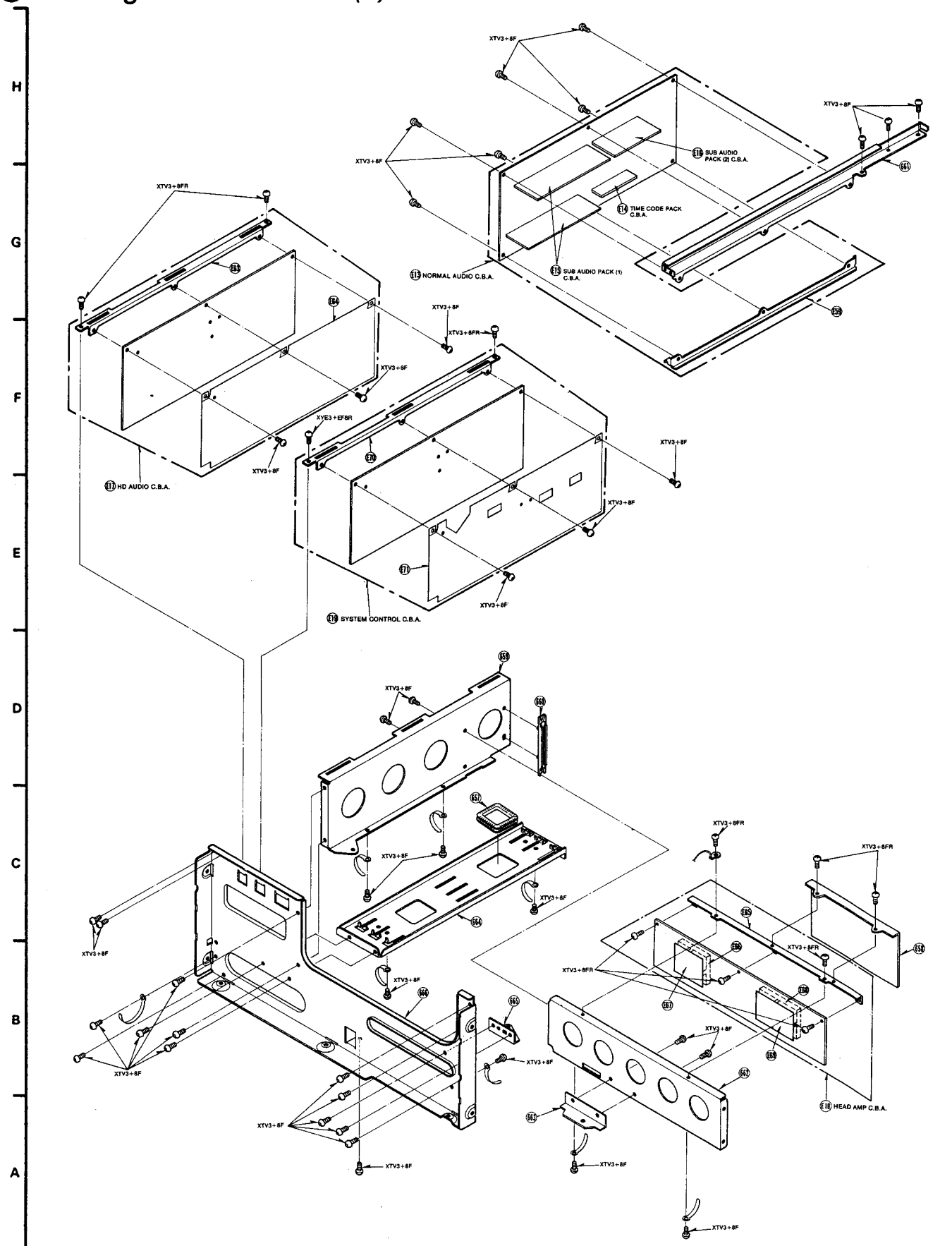

⑨ Casing Parts Section-(2)

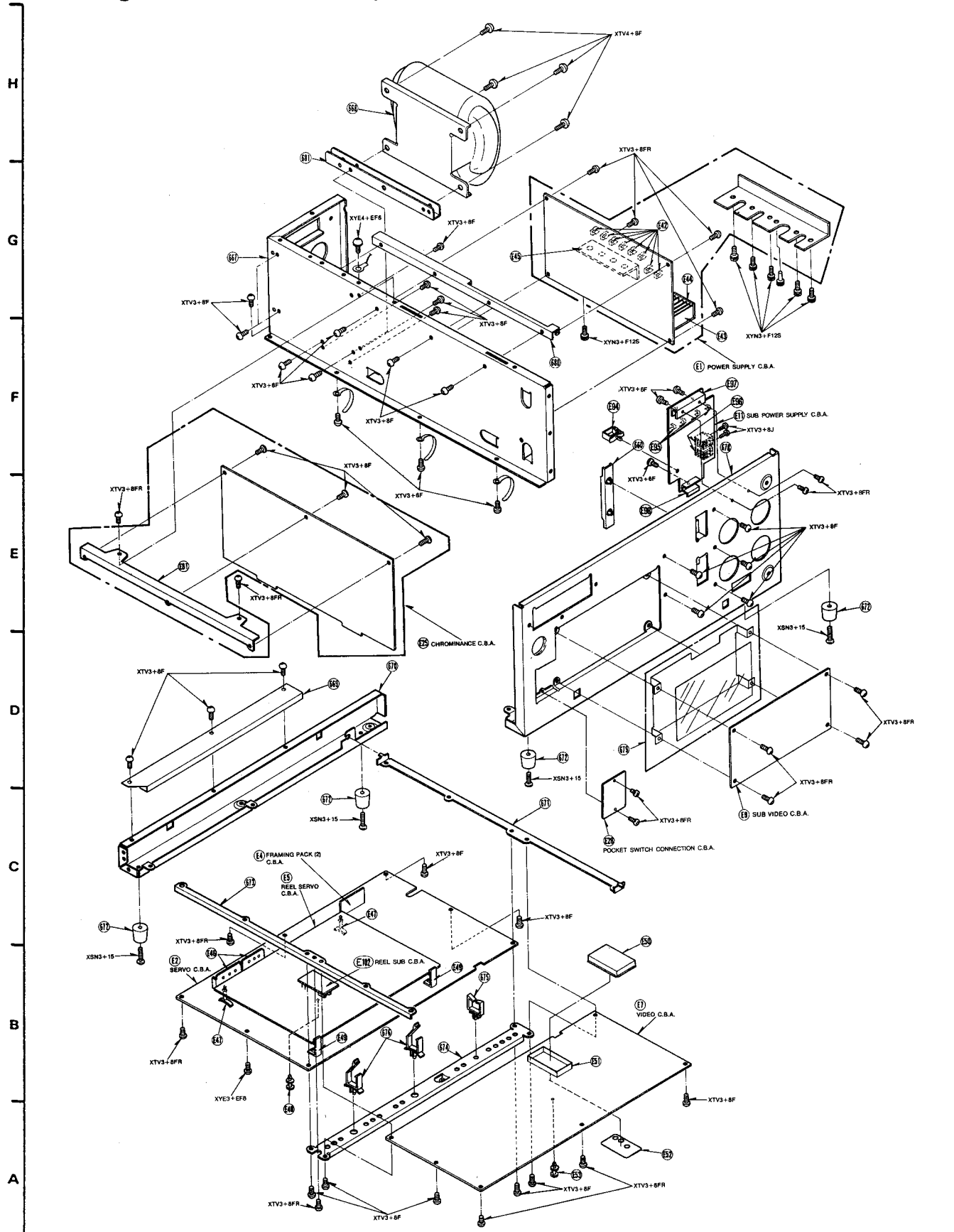

⑩ *Packing Parts Section*

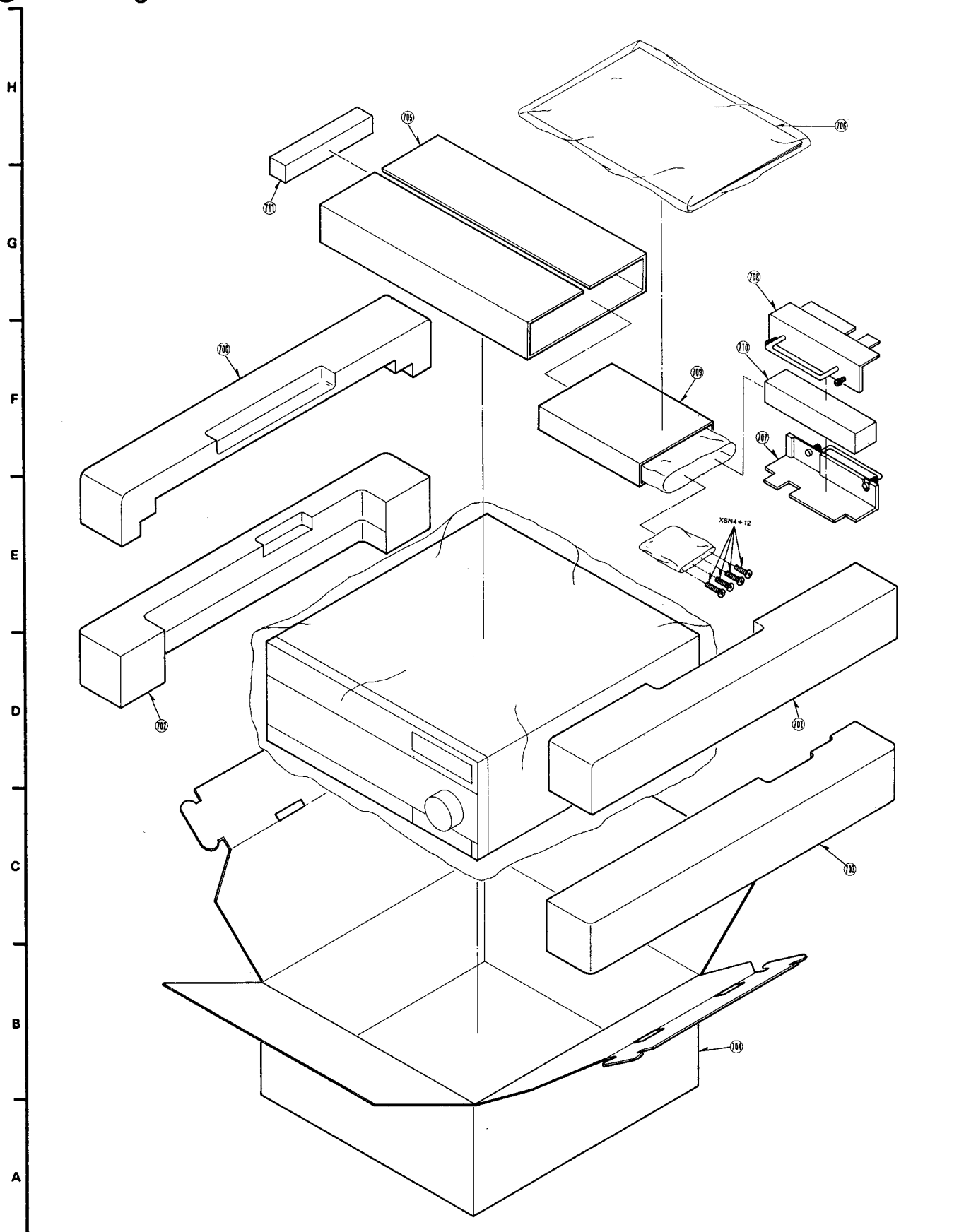

REPLACEMENT PARTS LIST

Notes:

1. • Be sure to make your orders of replacement parts according to this list.
   • "<R>" in Remark column indicates recommended parts.
   • "<M>" in Remark column indicates needed in the periodical maintenance.
2. IMPORTANT SAFETY NOTICE
   Components identified by " ! " have special characteristics important for safety.
   When replacing any of these components, use only the original ones.
   Meaning of symbol ! on this parts list is exactly the same as symbol ⚠ on Schematic and Circuit Board Diagrams.
3. Unless otherwise specified;
   All resistors are in OHMS (Ω), K=1,000Ω, M=1,000KΩ.
4. ITEM NUMBERS WITH CAPITAL LETTER E
   Item numbers with capital letter E (Example: E1, E2,...) in Ref. No. column mean that the parts are listed with the E item numbers in the exploded views.
5. The main assembled parts are shown below C.B.A. marked with "■".
6. When ordering parts, use part No. only from Part No. column.
7. Printed circuit board assembly with mark (NLA) is no longer available after discontinuation of the product.

1. SERVICING FIXTURES & TOOLS LIST

Ref.No.		Part No.	Part Name & Description	Pcs	Remarks
		VFM8180HMDH	VHS ALIGNMENT TAPE	1	
		VFK0329	POST ADJ. SCREWDRIVER	1	
		VFK0132	BACK TENSION METER	1	(T2-H7-UM)
			(TENTELOMETER,		
			MADE IN U.S.A.)		
		VFK0191	POST ADJ. PLATE	1	
		VFK0133	DIAL TORQUE GAUGE	1	
		VFK0134	PLASTIC CLAMPER ONLY	1	
		VFK0180	ADAPTOR FOR VFK0133	1	
		VFK0190	REEL TABLE HEIGHT FIXTURE	1	
		VFK0135	ECCENTRIC SCREWDRIVER	1	
		VFK0188	CASSETTE HOLDER FIXTURE	1	
		VFK0236	TENSION POST ADJ. PLATE	1	
		VFK0394	FWD SENSOR ADJ. FIXTURE	1	
		VFK0393	REV SENSOR ADJ. FIXTURE	1	
		VFK0328	H-POSITION ADJ. FIXTURE	1	
		VFK0330	FINE ADJ. SCREWDRIVER	1	
			(3mm PHI)		
		VFK0335	RETAINING RING REMOVER	1	
		VFK0326	HEX.WRENCH SET	1	
		VFK0343	CHECK LIGHT	1	
		MOR265	MOLYTONE GREASE	1	
		VFK27	HEAD CLEANING STICK	1	
		VFK0344	POST HEIGHT ADJ. FIXTURE P1	1	
		VFK0345	POST HEIGHT ADJ. FIXTURE P4	1	

2. MECHANICAL REPLACEMENT PARTS LIST

Ref.No.		Part No.	Part Name & Description	Pcs	Remarks
1(1)		VEH0414	UPPER CYLINDER UNIT	1	<R> <M>
2(1)		VEG0529	LOWER CYLINDER UNIT	1	<!> <R> <M>
3(1)		VXS0055	EARTH ANGLE	1	
8(1)		VXP0761	ROLLER POST UNIT	1	
9(1)		VXP0302C	ROLLER POST UNIT	1	
10(1)		VXA1191	INCLIND BASE (S) UNIT	1	<R> <M>
11(1)		VXA1084	INCLIND BASE (B) UNIT	1	<R> <M>
12(1)		VXA1189	SHAFT HOLDER (S) UNIT	1	
13(1)		VXA1333	SHAFT HOLDER (T) UNIT	1	
14(1)		VMD0100	POST STOPPER	2	
15(1)		VMA4122	LEAD WIRE ANGLE	1	
16(1)		VMA4436	SHAFT HOLDER STOPPER (A)	2	
17(1)		VXA1334	LOADING BASE UNIT	1	
18(1)		VXL0753	LOADING ARM (L) UNIT	1	
19(1)		VXL0861	LOADING ARM (R) UNIT	1	
20(1)		VMB0669	LOADING SPRING	2	
21(1)		VXP0505	LOADING GEAR UNIT	2	
23(1)		VMX0647	POST SLEEVE	1	
24(1)		VMB0699	P4 SPRING	1	
25(1)		VMX1302	UPPER LIMITER	1	
26(1)		VXP0921	SUPPLY ROLLER	1	
27(1)		VMX1268	COLLAR	1	
28(1)		VMX1302	LOWER LIMITER (S)	1	
29(1)		VMX0663	LOWER LIMITER ROLLER	1	
30(1)		VMB0754	SUPPLY LIMITER SPRING	1	
32(1)		VMB1251	ADJUST SPRING	1	
33(1)		VBR0147	A/C HEAD	1	<R> <M>
34(1)		VXA1990	A/C HEAD BASE	1	
35(1)		VXA1438	A/C HEAD BASE(B) UNIT	1	
36(1)		VMA4289	NUT BAR	1	
37(1)		VMB0997	A/C HEAD HEIGHT SPRING	1	
38(1)		VMD0752	P4 CAP	1	
183(2)		VSP0293	S-VHS CASSETTE SWITCH	1	
184(2)		VXA3008	POSITION PLATE (R) UNIT	1	
40(2)		DN838A	IC	2	<R>
41(2)(3)		ON1108	PHOTO SENSOR	3	<R>
42(2)		VXA1899	SUPPLY FORWARD TENSION	1	
			SENSOR UNIT		
43(2)		VXA1787	SUPPLY REVERSE TENSION	1	
			SENSOR UNIT		
44(2)		VXA1788	REEL SENSOR BASE UNIT	1	
45(2)		VMD0145	LED HOLDER	1	
46(2)		LN58	LED	2	<R>
47(2)		VMA6190	SENSOR BASE (R)	1	
48(2)		VMA6191	SENSOR BASE (F)	1	
49(2)		VMA6192	SPRING ANGLE	1	
50(2)		VMG0283	CASSETTE UP STOPPER	1	
51(2)		VMS1743	SIDE LEVER SCREW	1	
52(2)		VMA6189	POSITION PLATE (L)	1	
53(2)		VMB1129	TENSION SPRING	1	
54(2)		VML1460	SENSOR LEVER	1	
55(2)		VXL1739	TENSION ARM UNIT	1	<R> <M>
56(2)		VMB1127	TENSION ARM SPRING	1	
57(2)		VXZ0148	BRAKE LEVER (L) UNIT	1	<R> <M>
58(2)		VXZ0149	BRAKE LEVER (R) UNIT	1	<R> <M>
59(2)		VMB0661	BRAKE SPRING	1	
60(2)		VXR0113	SUPPLY REEL TABLE UNIT	1	<R> <M>
61(2)		VXR0113	TAKEUP REEL TABLE UNIT	1	<R> <M>
62(2)		VMD0336	HALL IC BRACKET	1	
63(2)		VMA4891	REEL SENSOR BASE	1	
64(2)		VMA6005	WIRE STOPPER	1	
65(2)		VMA4318	CHASSIS BRACKET	1	
66(2)		VMA7162	POSITION PLATE (R)	1	<R>
67(3)		VDV0122	LOADING BELT (1)	1	<R> <M>
68(3)		VEM0164	DD CAPSTAN UNIT	1	<!> <R> <M>
69(3)		VML1336	SENSOR LEVER (R)	1	
70(3)		VMP0953	SENSOR SPRING (R)	1	
71(3)		VMA4893	SENSOR BASE (R)	1	
72(3)		VMA6326	WIRE STOPPER	1	
73(3)		VEK0854	DEW SENSOR UNIT	1	<R>
74(3)		VMD0555	SPACER	1	
75(3)		VSJ0063	PRESSURE ROLLER SOLENOID	1	
76(3)		VMB0719	PRESSURE SPRING	1	

Ref.No.		Part No.	Part Name & Description	Pcs	Remarks
77(3)		VML1339	SOLENOID LEVER (A)	1	
78(3)		VEM0135	LOADING MOTOR UNIT	1	<!> <R>
79(3)		VML1329	SOLENOID LEVER (B)	1	
80(3)		VXA1236	SOLENOID BRACKET UNIT	1	
81(3)		VMX0275	SLEEVE	1	
82(3)		VXA1790	OPENER UNIT	1	
83(3)		VXG0013S	PRESSURE ROLLER	1	<R> <M>
84(3)		VXL1423	PRESSURE ROLLER ARM(1) UNIT	1	
85(3)		VMB0947	PRESSURE ROLLER ARM SPRING	1	
86(3)		VXL0907	ADJUST LEVER UNIT	1	
87(3)		VXL0906	SUB LOADING ARM UNIT	1	
88(3)		VMB0723	SUB LOADING ARM SPRING	1	
89(3)		VMB0949	LEVER SPRING	1	
90(3)		VMM0091	ACTION SLIDE SUB LEVER	1	
91(3)		VMX0122	SLIDE WASHER (A)	4	
92(3)		VXL0901	ACTION SLIDE LEVER UNIT	1	
93(3)		VXL0995	PULL OUT ARM UNIT	1	
94(3)		VMB0752	PULL OUT ARM SPRING	1	
95(3)		VXL0900	ACTION LEVER UNIT	1	
96(3)		VML1327	ACTION SUB LEVER UNIT	1	
97(3)		VMB0950	ACTION SUB LEVER SPRING	1	
98(3)		VXK0496	PRESSURE ROLLER BASE UNIT	1	
99(3)		VMB0948	ACTION SLIDER RETURN SPRING	1	
100(3)		VMA6200	SPRING HOOK	1	
101(3)		VXL0944	ACTION LEVER UNIT	1	
102(3)		VDP0748	LARGE PULLEY	1	
103(3)		VDV0135	LOADING BELT (2)	1	<R> <M>
104(3)		VDP0750	IDLER PULLEY	1	
105(3)		VDP0735	LOADING INTERMEDIATE PULLEY	1	
106(4)		VMA6203	SAFETY TAB SWITCH ANGLE	1	
107(4)		VDG0017	INTERMEDIATE GEAR	1	
108(4)		VDG0096	CAM GEAR	1	<R>
109(4)		VMX0268	ACTION GEAR SLEEVE	1	
110(4)		VDG0016	ACTION GEAR	1	
111(4)		VMA4088	ACTION GEAR HOLDER	1	
112(4)		VXL0898	SECTOR GEAR	1	
113(4)		VMX0308	SLIDE WASHER	8	
114(4)		VXL1074	MAIN LEVER UNIT	1	
115(4)		VSJ0062	BRAKE SOLENOID	2	<R>
			(SUPPLY) (TAKEUP)		
116(4)		VXK0606	SOLENOID BASE (1) UNIT	1	
117(4)		VMM0114	MAIN BRAKE RELEASE LEVER(L)	1	
118(4)		VMM0115	MAIN BRAKE RELEASE LEVER(R)	1	
119(4)		VMD0277	BRAKE RELEASE BRACKET	1	
120(4)		VMA6300	FRONT CONNECTION C.B. ANGLE	1	
121(4)		VXK0603	SUB CHASSIS (1) UNIT	1	
122(4)		VMA4895	MODE SELECT SWITCH HOLDER	1	
123(4)		VSS0057	MODE SELECT SWITCH	1	<R>
124(4)		VMA6194	MOTOR BASE	2	
125(4)		KFN56DB3AS	REEL MOTOR (SUPPLY)	1	<!> <R> <M>
126(4)		KFN56DB3AT	REEL MOTOR (TAKEUP)	1	<!> <R> <M>
127(4)		VGF0021	BELT COVER	1	
129(4)		VMA5826	CASSETTE SUPPORT ANGLE	1	
131(5)		VML1712	WIPER ARM	2	
132(5)		VDG0235	LARGE INTERMEDIATE GEAR	2	
133(5)		VDG0119	SHAFT GEAR	2	
135(5)		VXA2354	SIDE PLATE (L) UNIT	1	
136(5)		VML1711	FRONT OPENER LINK	1	
137(5)		VMD0768	FRONT GUIDE (L)	1	
138(5)		VMS2350	BLINDER PANEL SHAFT	2	
139(5)		VKF1198	BLINDER PANEL	1	<R>
140(5)		VMS2304	MAIN SHAFT	1	
141(5)		VMD0767	FRONT GUIDE (R)	1	
142(5)		VXA2355	SIDE PLATE (R) UNIT	1	
143(5)		VDG0233	CLUTCH GEAR	1	
144(5)		VMX0531	CLUTCH SPACER	1	
145(5)		VDG0234	WARM WHEEL	1	
146(5)		VDG0236	SMALL INTERMEDIATE GEAR	2	
147(5)		VMB1402	CLUTCH SPRING	1	
148(5)		VSM0026	SWITCH	1	<R>
149(5)		VMX0530	CLUTCH WASHER	1	
150(5)		VMA6702	SWITCH ANGLE	1	
151(5)		VSM0049	SWITCH	2	<R>
152(5)		VDG0183	WIPER GEAR (R)	1	

Ref.No.		Part No.	Part Name & Description	Pcs	Remarks
153(5)		VMB1309	WIPER SPRING (R)	1	
154(5)		VXP0670	PULLEY SHAFT UNIT	1	
155(5)		VDV0144	ELEVATOR MOTOR BELT	1	<R> <M>
156(5)		VMD0454	SPRING HOLDER	1	
157(5)		VMA6715	SWITCH BASE	1	
158(5)		VMB1091	SAFETY TAB SPRING	1	
159(5)		VMD0453	SAFETY TAB KNOB	1	
160(5)		VMD0452	CASSETTE GUIDE	1	
161(5)		VSM0047	CASSETTE IN SWITCH	1	<R>
162(5)		VMD0492	MIRROR DRIVE PANEL (L)	1	
163(5)		VXA1795	MIRROR UNIT	1	
164(5)		VDP0944	WIPER ROLLER (S)	2	
165(5)		VMA6494	FRONT LOADING TOP PLATE	1	
166(5)		VMD0491	MIRROR DRIVE PANEL (R)	1	
167(5)		VMB1171	BLINDER SPRING	1	
168(5)		VMB1125	MIRROR SPRING	1	
169(5)		VDB0660	WARM SHAFT BEARING	1	
170(5)		VDP0918	CASSETTE HOLDER ROLLER(S)	2	
171(5)		VMB1400	PULLEY SHAFT SPRING	1	
172(5)		VMX0934	WARM WASHER	1	
173(5)		VDG0232	WARM UNIT	1	
174(5)		VMS2605	MIRROR SHAFT (B)	1	
175(5)		VMS2604	MIRROR SHAFT (A)	1	
176(5)		VXA3561	FRONT LOADING UNIT	1	
180(5)		VXA2356	CASSETTE HOLDER UNIT	1	
181(5)		VMB1310	WIPER SPRING (L)	1	
182(5)		VDG0182	WIPER GEAR (L)	1	
600(6)		VGM0288	TOP PANEL	1	
601(6)		VMX0871	SCREW SPACER	2	
602(6)		VMP0912	REINFORCEMENT ANGLE (L)	1	
603(6)		VSC1703	GROUND ANGLE	4	
604(6)		VGQ0981	SWITCH BOX	1	
605(6)		VMT0157	RUBBER CUSHION	2	
606(6)		VMB1493	EJECT SPRING	1	
607(6)		VYP2767	FRONT PANEL UNIT (UPPER)	1	<R>
608(6)		VGU2943	VOLUME KNOB	5	<R>
609(6)		VMG0354	RUBBER CAP	5	<R>
610(6)		VYP2584	FRONT PANEL UNIT (LOWER)	1	
613(6)		VGQ0976	GUARD SPACER (C)	2	
614(6)		VGQ0975	GUARD SPACER (D)	4	
615(6)		VMP0917	SPACER	1	
616(6)		VGU2946	SELECT SWITCH KNOB	3	<R>
617(6)		VGU2940	MEMORY KNOB	1	<R>
618(6)		VGU2941	SEARCH KNOB	1	<R>
619(6)		VMG0353	RUBBER CAP	1	<R>
620(6)		VSP0185	SEARCH DIAL UNIT	1	
621(6)		VMP0911	REINFORCEMENT ANGLE (R)	1	
622(6)		VGH2016	PANEL	1	
623(6)		VKF0719	SWITCH PANEL	1	
624(6)		VGU2945	SWITCH KNOB	5	
625(6)		VKF0962	C.BOARD HOLDER	1	
626(6)		VGK1671	SURFACE PANEL	1	<R>
627(6)		VGU2944	LOCK UNIT	1	
628(6)		VSE0097	TRACKING METER	1	<R>
629(6)		VSE0065	AUDIO METER	2	<R>
630(7)		VGM0290	SIDE COVER (L)	1	<R>
631(7)		VMP0909	FRONT JACK ANGLE	1	
632(7)		VSW0031	POWER SWITCH	1	<!> <R>
633(7)		VKM1072	BOTTOM COVER	1	<R>
634(7)		VGM0289	SIDE COVER (R)	1	<R>
635(7)		VJH0500	REAR JACK ANGLE	1	
637(7)		VJS1440	BNC JACK	5	
638(7)		VJS1132	DUB OUT CONNECTOR	1	
639(7)		VJH0082	GROUND TERMINAL	1	
640(7)		VMX1538	P.C.BOARD CLAMPER	3	
641(7)		VJP2524	XLR CONNECTOR (MALE)	1	<R>
643(7)		VGQ0978	REAR FOOT	2	
645(7)		VJJ0082	PHONO PIN JACK	3	<R>
646(7)		VGH2017	REAR PANEL	1	
648(7)		VJA0169	AC POWER CORD	1	<!> <R>
					FOR AG-7510-E/EP
648(7)		VJA0074	AC POWER CORD	1	AG-7510-B
648(7)		VJA0087	AC POWER CORD	1	AG-7510-A
649(7)		VDB0293	AC POWER CORD BUSHING	1	<!> <R>

3. ELECTRICAL REPLACEMENT PARTS LIST

Ref.No.		Part No.	Part Name & Description	Pcs	Remarks
652(7)		VMP1028	PHONO PIN JACK PLATE	3	
654(7)		VRFO049	FAN MOTOR	1	<!> <R>
655(7)		VSC2100	HD HEAD AMP SHIELD CASE	1	
			(TOP)		
656(7)		VSC2103	VIDEO HEAD AMP SHIELD CASE	1	
			(TOP)		
657(8)		VJFO110	CAPABLE BUSH	1	
658(8)		VSC2187	HEAD AMP SHIELD PLATE	1	
			CASE (TOP)		
659(8)		VMPO901	CHASSIS FRAME (LEFT)	1	
660(8,9)		VGQ1016	C.BOARD GUIDE RAIL	2	
661(8)		VMPO896	SIDE FRAME SUPPORT ANGLE	1	
662(8)		VMP1319	CENTER FRAME	1	
663(8)		VMPO900	CHASSIS FRAME (CENTER)	1	
664(8)		VMP1320	C.BOARD HOLDER PLATE	1	
665(8)		VMPO899	CHASSIS FRAME (RIGHT)	1	
666(8)		VXA2589	FRONT FRAME UNIT	1	
667(9)		VMPO897	REAR FRAME (L)	1	
668(9)		VTPO265	POWER TRANSFORMER	1	<!> <R>
669(9)		VSC1718	SHIELD CASE	1	
670(9)		VXA2590	SIDE FRAME (L) UNIT	1	
671(9)		VMPO908	C.BOARD ANGLE (R)	1	
672(9)		VMG0172	RUBBER FOOT	4	
673(9)		VMPO906	C.BOARD ANGLE (F)	1	
674(9)		VMPO907	C.BOARD ANGLE (C)	1	
675(9)		VJFO022	LEAD WIRES CLAMPER	1	
676(9)		VJFO056	LEAD WIRES CLAMPER	2	
678(9)		VXA2591	SIDE FRAME (R) UNIT	1	
679(9)		VSC1810	C.BOARD SHIELD PLATE	1	
680(9)		VMP1023	TRANSFORMER ANGLE (A)	1	
681(9)		VMP1024	TRANSFORMER ANGLE (B)	1	
682(7)		VGT0341	HEADPHONE LEVEL KNOB	1	
683(8)		VMX1525	SPACER	1	
684(8)		VJFO004	WIRE SADDLE	2	
685(7)		ESE37212	VOLTAGE SELECTSW	1	
686(7)		VMXO235	SW COVER	1	
700(10)		VPN1433	LEFT TOP CUSHION	1	
701(10)		VPN1431	RIGHT TOP CUSHION	1	
702(10)		VPN1434	LEFT BOTTOM CUSHION	1	
703(10)		VPN1432	RIGHT BOTTOM CUSHION	1	
704(10)		VPG4678	PACKING CASE	1	FOR AG-7510-E <R>
704(10)		VPG4679	PACKING CASE	1	FOR AG-7510-B <R>
704(10)		VPG4680	PACKING CASE	1	FOR AG-7510-A <R>
704(10)		VPG4681	PACKING CASE	1	FOR AG-7510-EP <R>
705(10)		VPN1581	TOP PAD	1	
706(10)		VQT3140	OPERATING INSTRUCTIONS	1	<!> <R> (ENGLISH)
706(10)		VQT3141	OPERATING INSTRUCTIONS	1	<!> <R> (GERMAN &
					FRENCH)
706(10)		VQT3142	OPERATING INSTRUCTIONS	1	<!> <R> (ITALIAN &
					SPANISH)
707(10)		VXA2997	PACK MOUNT ADAPTER UNIT (L)	1	
708(10)		VXA2996	PACK MOUNT ADAPTER UNIT (R)	1	
709(10)		VPKO708	ACCESSARY BOX	1	
711(10)		VJA0510	Y/C CABLE	1	<R>
800(1)		VHNO014	"X" ADJUST NUT	1	
801(1)		VHDO045	NUT	1	
802(3)		VHNO051	PRESSURE ROLLER SCREW	1	
803(3)		VHDO045	NUT	1	
804(6)		VHDO222	SCREW	2	
805(7)		VHDO426	SCREW	8	
806(1)		VHDO054	ADJUST SCREW	1	

Ref.No.		Part No.	Part Name & Description	Pcs	Remarks
E1		VEPO1395A	POWER SUPPLY C.B.A.	1	(NLA)<R>
E11		VEPO1347A	SUB POWER SUPPLY C.B.A.	1	(NLA)<R>
E32		VEPOOF76B	FRONT JACK C.B.A.	1	(NLA)<R>
E2		VEPO2347A	SERVO C.B.A.	1	(NLA)<R>
					INCLUDING THE
					FRAMING PACK (2)
					C.B.A. (VEPOOG61A)
E4		VEPOOG61A	FRAMING PACK (2) C.B.A.	1	(NLA)<R>
					PARTS LIST IS
					INCLUDED IN SERVO
					C.B.A.(VEPO2347A)
E5		VEPO2224E	REEL SERVO C.B.A.	1	(NLA)<R>
					INCLUDING THE
					REEL SUB C.B.A.
					(VEPOOKO7A)
E102		VEPOOKO7A	REEL SUB C.B.A.	1	(NLA)<R>
					PARTS LIST IS
					INCLUDED IN REEL
					SERVO C.B.A.
					(VEPO2224E)
E7		VEPO3662A	VIDEO C.B.A.	1	(NLA)<R>
					INCLUDING THE
					VIDEO SUB C.B.A.
					(VEPOONO6A)
E8		VEPOONO6A	VIDEO SUB C.B.A.	1	(NLA)<R>
					PARTS LIST IS
					INCLUDED IN VIDEO
					C.B.A. (VEPO3662A)
E9		VEPO3558B	SUB VIDEO C.B.A.	1	(NLA)<R>
E18		VEPO5141B	HEAD AMP C.B.A.	1	(NLA)<R>
E17		VEPO4134F	HD AUDIO C.B.A.	1	(NLA)<R>
E19		VEPO6564B	SYSTEM CONTROL C.B.A.	1	(NLA)<R>
E20		VEPO6518B	INTERFACE C.B.A.	1	(NLA)<R>
E25		VEPO8132A	CHROMINANCE C.B.A.	1	(NLA)<R>
E28		VEPOOL96B	POCKET SW CONNECTION C.B.A.	1	(NLA)<R>
E13		VEPO4257B	NORMAL AUDIO C.B.A.	1	(NLA)<R>
					INCLUDING THE
					SUB AUDIO PACK (1)
					C.B.A. (VEPO4133B)
					SUB AUDIO PACK (2)
					C.B.A. (VEPO4139D)
					TIME CODE PACK C.B.A.
					(VEPOOG62A)
E15		VEPO4133B	SUB AUDIO PACK (1) C.B.A.	1	(NLA)<R>
					PARTS LIST IS
					INCLUDED IN RINEAR
					AUDIO C.B.A.
					(VEPO4257B)
E16		VEPO4139D	SUB AUDIO PACK (2) C.B.A.	1	(NLA)<R>
					PARTS LIST IS
					INCLUDED IN RINEAR
					AUDIO C.B.A.
					(VEPO4257B)
E14		VEPOOG62A	TIME CODE PACK C.B.A.	1	(NLA)<R>
					PARTS LIST IS
					INCLUDED IN RINEAR

Ref.No.		Part No.	Part Name & Description	Pcs	Remarks
					AUDIO C.B.A.
					(VEPO4257B)
E12		VEPO4269A	AUDIO JACK C.B.A.	1	(NLA)<R>
E23		VEPO6426D	FRONT PANEL C.B.A.	1	(NLA)<R>
E29		VEP00J60A	EJECT C.B.A.	1	(NLA)<R>
E30		VEP00G66A	MATER C.B.A.	1	(NLA)<R>
E31		VEK3381	FRONT CONNECTION C.B.A.	1	(NLA)<R>
E22		VEPO6565A	KEY BOARD C.B.A.	1	(NLA)<R>
E27		VEP00N83A	POCKET SW C.B.A.	1	(NLA)<R>
E21		VEPO6519A	34P CONNECTOR C.B.A.	1	(NLA)<R>
E33		VEP00L91B	INPUT JACK C.B.A.	1	(NLA)<R>
E34		VEP00L92B	OUTPUT JACK C.B.A.	1	(NLA)<R>
E36		VEP00L94A	S-VIDEO OUTPUT C.B.A.	1	(NLA)<R>
E26		VEP00L97A	CAP OVERLIDE C.B.A.	1	(NLA)<R>
E38		VEK3849	LAMP C.B.A.	1	(NLA)<R>
E39		VEK3848	PHOTO TR. UNIT	1	(NLA)<R>
E40		VEK3832	PRESSURE ROLLER SOLENOID	1	(NLA)<R>
			CONNECTION C.B.A.		
E41		VEM0256	ELEVATOR UNIT	1	(NLA)<R>
	■	VEP01395A	POWER SUPPLY C.B.A.		
C1001		ECQU2A823MN	P.CAPACITOR 250V 0.082U	1	<!><R>
C1002		ECES1EG682M	E.CAPACITOR 25V 6800U	1	
C1003		ECEA1CU471	E.CAPACITOR 16V 470U	1	
C1004		ECEA1EPZ471	E.CAPACITOR 25V 470U	1	
C1005,06		ECEA1AU471	E.CAPACITOR 10V 470U	2	
C1007		ECES1VG472M	E.CAPACITOR 35V 4700U	1	
C1008		ECEA1VU101	E.CAPACITOR 35V 100U	1	
C1009		ECES1VG472M	E.CAPACITOR 35V 4700U	1	
C1010		ECEA1EU102	E.CAPACITOR 25V 1000U	1	
C1011		ECEA1CU471	E.CAPACITOR 16V 470U	1	
C1012,13		ECEA1CU100	E.CAPACITOR 16V 10U	2	
C1014		ECQM1H222KV	P.CAPACITOR 50V 2200P	1	
C1015		ECQM1H822KV	P.CAPACITOR 50V 8200P	1	
C1016,17		ECQV1H104JZ	P.CAPACITOR 50V 0.1U	2	
C1018		ECEA1CU470	E.CAPACITOR 16V 47U	1	
C1019,20		ECQB1H103JZ	P.CAPACITOR 50V 0.01U	2	
C1021		ECEA1CU100	E.CAPACITOR 16V 10U	1	
C1022		ECQB1H103JZ	P.CAPACITOR 50V 0.01U	1	
D1001		RBV601	DIODE	1	<R>
D1002		RD16EB	ZENER 16V	1	<R>
D1003		RBV401	DIODE	1	<R>
D1004		ERC84009	DIODE	1	<R>
D1005		RBV601	DIODE	1	<R>
D1006		RK46	DIODE	1	<R>
D1007		MA165	DIODE	1	<R>
D1008		MA4130M	DIODE	1	<R>
D1009		MA165	DIODE	1	<R>
D1011		MA165	DIODE	1	<R>
D1012		MA4100	DIODE	1	<R>

Ref.No.		Part No.	Part Name & Description	Pcs	Remarks
D1013		MA165	DIODE	1	<R>
F1001		XBA2C16TB0	FUSE	1	<!><R>
F1002-04		XBA2C31TB0	FUSE	3	<!><R>
IC1001		UPC393C	IC	1	<R>
IC1002		UPC4556C	IC	1	<R>
IC1003,04		SI3052V	IC	2	<R>
IC1005,06		SI3122V	IC	2	<R>
IC1007		UPC393C	IC	1	<R>
IC1008		UPC4556C	IC	1	<R>
L1001		VTQ0006	COIL	1	
L1002,03		VLQ0283	COIL	2	
P1002		VJP1233R	CONNECTOR(MALE) 6P	1	
P1003		VJP1233T	CONNECTOR(MALE) 6P	1	
P1004		VJP1235R	CONNECTOR(MALE) 8P	1	
P1005		VJP1232R	CONNECTOR(MALE) 5P	1	
P1006		VJP1233G	CONNECTOR(MALE) 6P	1	
P1007		VJP1229T	CONNECTOR(MALE) 2P	1	
P1008		VJP1229	CONNECTOR(MALE) 2P	1	
P1009		VJP1234T	CONNECTOR(MALE) 7P	1	
P1010		VJP1230T	CONNECTOR(MALE) 3P	1	
P1011		VJP1229	CONNECTOR(MALE) 2P	1	
Q1001		2SD1266	TRANSISTOR	1	(Q,R)<R>
Q1002		2SD639	TRANSISTOR	1	(R,Q)<R>
Q1003		2SD1444A	TRANSISTOR	1	(P,Q,R)<R>
Q1004		2SB643	TRANSISTOR	1	(R,S)<R>
Q1005		2SD637	TRANSISTOR	1	(Q,R)<R>
Q1006		2SB643	TRANSISTOR	1	(R,S)<R>
Q1007		2SD1444A	TRANSISTOR	1	(P,Q,R)<R>
R1001		ERDS2TJ332	C.RESISTOR 1/4W 3.3K	1	
R1002		ERDS2TJ102	C.RESISTOR 1/4W 1K	1	
R1003		ERDS2TJ123	C.RESISTOR 1/4W 12K	1	
R1004		EROS2CKF5101	M.RESISTOR 1/4W 5.1K	1	
R1005		EROS2CKF3001	M.RESISTOR 1/4W 3K	1	
R1006		ERDS2TJ102	C.RESISTOR 1/4W 1K	1	
R1007-09		ERDS2TJ104	C.RESISTOR 1/4W 100K	3	
R1010,11		ERDS2TJ102	C.RESISTOR 1/4W 1K	2	
R1012		ERDS2TJ103	C.RESISTOR 1/4W 10K	1	
R1013		ERDS2TJ102	C.RESISTOR 1/4W 1K	1	
R1014		ERDS2TJ471	C.RESISTOR 1/4W 470	1	
R1015		ERDS2TJ103	C.RESISTOR 1/4W 10K	1	
R1016		ERDS2TJ105	C.RESISTOR 1/4W 1000K	1	
R1019		ERDS2TJ393	C.RESISTOR 1/4W 39K	1	
R1020		ERDS2TJ273	C.RESISTOR 1/4W 27K	1	
R1021		ERDS2TJ683	C.RESISTOR 1/4W 68K	1	
R1022,23		ERDS2TJ103	C.RESISTOR 1/4W 10K	2	
R1024		ERDS2TJ102	C.RESISTOR 1/4W 1K	1	
R1025		ERDS2TJ822	C.RESISTOR 1/4W 8.2K	1	
R1026		ERDS2TJ473	C.RESISTOR 1/4W 47K	1	
R1027		ERDS2TJ472	C.RESISTOR 1/4W 4.7K	1	
R1028		EROS2CKF1801	M.RESISTOR 1/4W 1.8K	1	
R1029		EROS2CKF5601	M.RESISTOR 1/4W 5.6K	1	
R1030		ERDS2TJ823	C.RESISTOR 1/4W 82K	1	
R1031		ERDS2TJ104	C.RESISTOR 1/4W 100K	1	
R1032		ERDS2TJ563	C.RESISTOR 1/4W 56K	1	
R1033		ERDS2TJ104	C.RESISTOR 1/4W 100K	1	
R1034		ERDS2TJ102	C.RESISTOR 1/4W 1K	1	

Ref.No.		Part No.	Part Name & Description	Pcs	Remarks
VR1001		EVM31GA00B53	V.RESISTOR 5K	1	
			MISCELLANEOUS		
E42		VJS0039	FUSE HOLDER	8	
E43		VSC1323	HEAT SINK	7	
E44		VSC2099	HEAT SINK	1	
E45		VSC2131	HEAT SINK	1	
	■	VEP01347A	SUB POWER C.B.A.		
C1201,02		ECEA1ESS471	E.CAPACITOR 25V 470U	2	
C1203,04		ECEA1VPZ101	E.CAPACITOR 35V 100U	2	
C1205,06		ECEA1ESS471	E.CAPACITOR 25V 470U	2	
D1201-04		10E1	DIODE	4	<R>
F1201,02		XBA2C06TB0	FUSE 0.6A	2	<!><R>
IC1201		AN7812F	IC	1	<R>
IC1202		AN7912F	IC	1	<R>
P1201		VJP1244T	CONNECTOR(MALE) 4P	1	
P1202		VJP1242T	CONNECTOR(MALE) 2P	1	
			MISCELLANEOUS		
E94		VJF0102	LEAD WIRES CLAMPER	1	
E95		VJS0039	FUSE HOLDER	4	
E96		VSC1068	HEAT SINK	2	
E97		VMP1771	SUPPORT (UPPER)	1	
E98		VMP1772	SUPPORT (LOWER)	1	
	■	VEP00F76B	FRONT JACK C.B.A.		
C6601		ECEA1CKS470	E.CAPACITOR 16V 47U	1	
C6602-04		ECEA1CKS100	E.CAPACITOR 16V 10U	3	
C6605-07		ECEA1CKS470	E.CAPACITOR 16V 47U	3	
C6608,09		ECEA1CKS100	E.CAPACITOR 16V 10U	2	
D6601-03		MA165	DIODE	3	<R>
IC6601		UPD4066BC	IC	1	<R>
IC6602		UPC4556C	IC	1	<R>
J6603		VJJ0094	JACK	1	

Ref.No.		Part No.	Part Name & Description	Pcs	Remarks
L6601		VLQEL05F102K	COIL 1000UH	1	
P6603		VJP1249T	CONNECTOR(MALE) 9P	1	
Q6601,02		2SD1330	TRANSISTOR	2	(R,S)<R>
Q6603,04		2SD636	TRANSISTOR	2	(Q,R)<R>
QR6601		UN1213	TRANSISTOR-RESISTOR	1	<R>
R6601		ERJ6GEYJ393	M.RESISTOR CH 1/10W 39K	1	
R6602		ERJ6GEYJ683	M.RESISTOR CH 1/10W 68K	1	
R6603		ERJ6GEYJ393	M.RESISTOR CH 1/10W 39K	1	
R6604		ERJ6GEYJ683	M.RESISTOR CH 1/10W 68K	1	
R6605,06		ERJ6GEYJ103	M.RESISTOR CH 1/10W 10K	2	
R6607		ERJ6GEYJ224	M.RESISTOR CH 1/10W 220K	1	
R6608,09		ERJ6GEYJ103	M.RESISTOR CH 1/10W 10K	2	
R6610		ERJ6GEYJ223	M.RESISTOR CH 1/10W 22K	1	
R6611,12		ERJ6GEYJ562	M.RESISTOR CH 1/10W 5.6K	2	
R6613		ERJ6GEYJ333	M.RESISTOR CH 1/10W 33K	1	
R6614		ERJ6GEYJ102	M.RESISTOR CH 1/10W 1K	1	
R6615		ERJ6GEYJ561	M.RESISTOR CH 1/10W 560	1	
R6616		ERJ6GEYJ470	M.RESISTOR CH 1/10W 47	1	
R6617		ERJ6GEYJ101	M.RESISTOR CH 1/10W 100	1	
R6618		ERJ6GEYJ333	M.RESISTOR CH 1/10W 33K	1	
R6619		ERJ6GEYJ102	M.RESISTOR CH 1/10W 1K	1	
R6620		ERJ6GEYJ561	M.RESISTOR CH 1/10W 560	1	
R6621		ERJ6GEYJ470	M.RESISTOR CH 1/10W 47	1	
R6622		ERJ6GEYJ101	M.RESISTOR CH 1/10W 100	1	
R6623,24		ERJ6GEYJ102	M.RESISTOR CH 1/10W 1K	2	
R6625		ERJ6GEYJ121	M.RESISTOR CH 1/10W 120	1	
R6626,27		ERJ6GEYJ102	M.RESISTOR CH 1/10W 1K	2	
R6628		ERJ6GEYJ121	M.RESISTOR CH 1/10W 120	1	
VR6601		EWKH1AY15B14	V.RESISTOR 10K	1	
	■	VEP02347A	SERVO C.B.A.		INCLUDING THE COLOUR FRAMING C.B.A. (VEP00G61A)
C251		ECUM1H100DCN	C.CAPACITOR CH 50V 10P	1	
C252		ECUM1H390KCN	C.CAPACITOR CH 50V 39P	1	
C253		ECUM1H561KBN	C.CAPACITOR CH 50V 560P	1	
C254		ECQM1H102JV	P.CAPACITOR 50V 1000P	1	
C255		ECUM1H331KBN	C.CAPACITOR CH 50V 330P	1	
C256		ECEA1CKS330	E.CAPACITOR 16V 33U	1	
C2002		ECQB1H472JH	P.CAPACITOR 50V 4700P	1	
C2004		ECEA1HK010	E.CAPACITOR 50V 1U	1	
C2005-08		ECCF1H680JC	C.CAPACITOR 50V 68P	4	
C2009,10		ECEA0JK470	E.CAPACITOR 6.3V 47U	2	
C2011		ECQV1H823JZ	P.CAPACITOR 50V 0.082U	1	
C2012		ECQM1H223JV	P.CAPACITOR 50V 0.022U	1	
C2013		ECEA0JK470	E.CAPACITOR 6.3V 47U	1	
C2014		ECEA1HKN010	E.CAPACITOR 50V 1U	1	
C2015		ECEA1CKN100	E.CAPACITOR 16V 10U	1	
C2016		ECEA0JK470	E.CAPACITOR 6.3V 47U	1	
C2017		ECQM1H153JV	P.CAPACITOR 50V 0.015U	1	
C2018		ECEA50ZR33	E.CAPACITOR 50V 0.33U	1	
C2019-21		ECEA1HKN010	E.CAPACITOR 50V 1U	3	

Ref.No.	Part No.	Part Name & Description	Pcs	Remarks
C2022	ECKF1H103ZF	C.CAPACITOR 50V 0.01U	1	
C2023	ECCF1H330JC	C.CAPACITOR 50V 33P	1	
C2024	ECEA1CK470U	E.CAPACITOR 16V 47U	1	
C2025,26	ECEA50ZR68	E.CAPACITOR 50V 0.68U	2	
C2027	ECEA50ZR33	E.CAPACITOR 50V 0.33U	1	
C2028	ECEA1CK101	E.CAPACITOR 16V 100U	1	
C2029,30	ECQM1H103JV	P.CAPACITOR 50V 0.01U	2	
C2031	ECQV1H334JZ	P.CAPACITOR 50V 0.33U	1	
C2032,33	ECEA50ZR33	E.CAPACITOR 50V 0.33U	2	
C2034	ECEA1HK2R2	E.CAPACITOR 50V 2.2U	1	
C2035	ECEA1HK010	E.CAPACITOR 50V 1U	1	
C2036	ECQV1H104JZ	P.CAPACITOR 50V 0.1U	1	
C2037	ECEA1CK100	E.CAPACITOR 16V 10U	1	
C2038	ECEA0JK470	E.CAPACITOR 6.3V 47U	1	
C2039	ECQV1H563JZ	P.CAPACITOR 50V 0.056U	1	
C2040	ECQM1H272JV	P.CAPACITOR 50V 2700P	1	
C2041	ECEA1CV47T	E.CAPACITOR 10V	1	
C2042	ECEA0JU471	E.CAPACITOR 6.3V 470U	1	
C2043	ECQV1H224JZ	P.CAPACITOR 50V 0.22U	1	
C2044	ECKF1H103ZF	C.CAPACITOR 50V 0.01U	1	
C2045	ECEA1CK100	E.CAPACITOR 16V 10U	1	
C2046	ECEA0JK470	E.CAPACITOR 6.3V 47U	1	
C2047	ECQM1H333JV	P.CAPACITOR 50V 0.033U	1	
C2048	ECKF1H221KB	C.CAPACITOR 50V 220P	1	
C2049,50	ECEA0JK470	E.CAPACITOR 6.3V 47U	2	
C2051	ECEA1HKN010	E.CAPACITOR 50V 1U	1	
C2052	ECQV1H104JZ	P.CAPACITOR 50V 0.1U	1	
C2053	ECKF1H103ZF	C.CAPACITOR 50V 0.01U	1	
C2054	ECEA1CK100	E.CAPACITOR 16V 10U	1	
C2055	ECQV1H683JZ	P.CAPACITOR 50V 0.068U	1	
C2056	ECQM1H102JV	P.CAPACITOR 50V 1000P	1	
C2057	ECEA1HKN010	E.CAPACITOR 50V 1U	1	
C2058	ECKF1H102KB	C.CAPACITOR 50V 1000P	1	
C2059	ECQM1H392JV	P.CAPACITOR 50V 3900P	1	
C2060	ECKF1H221KB	C.CAPACITOR 50V 220P	1	
C2061	ECEA0JK470	E.CAPACITOR 6.3V 47U	1	
C2062	ECKF1H103ZF	C.CAPACITOR 50V 0.01U	1	
C2063	ECQV1H474JZ	P.CAPACITOR 50V 0.47U	1	
C2064	ECQV1H104JZ	P.CAPACITOR 50V 0.1U	1	
C2066	ECQP1H103GZ	P.CAPACITOR 50V 0.01U	1	
C2068,69	ECQM1H683JV	P.CAPACITOR 50V 0.068U	2	
C2071	ECQM1H103JV	P.CAPACITOR 50V 0.01U	1	
C2078	ECEA1CK100	E.CAPACITOR 16V 10U	1	
C2082	ECEA1CK100	E.CAPACITOR 16V 10U	1	
C2083	ECQV1H154JZ	P.CAPACITOR 50V 0.15U	1	
C2085	ECKF1H103ZF	C.CAPACITOR 50V 0.01U	1	
C2086	ECEA1CK101	E.CAPACITOR 16V 100U	1	
C2087	ECEA1CK470U	E.CAPACITOR 16V 47U	1	
C2088	ECKF1H103ZF	C.CAPACITOR 50V 0.01U	1	
C2090	ECQM1H103JV	P.CAPACITOR 50V 0.01U	1	
C2091	ECQM1H333JV	P.CAPACITOR 50V 0.033U	1	
C2092-94	ECEA1HKN010	E.CAPACITOR 50V 1U	3	
C2095	ECEA1HK3R3	E.CAPACITOR 50V 3.3U	1	
C2096	ECEA1EK100	E.CAPACITOR 25V 10U	1	
C2097	ECQM1H683JV	P.CAPACITOR 50V 0.068U	1	
C2098	ECEA1EU101	E.CAPACITOR 25V 100U	1	
C2099	ECEA1CK100	E.CAPACITOR 16V 10U	1	
C2100	ECKF1H103ZF	C.CAPACITOR 50V 0.01U	1	
C2101	ECQM1H822JV	P.CAPACITOR 50V 8200P	1	
C2102-04	ECEA50ZR22	E.CAPACITOR 50V 0.22U	3	
C2105	ECEA1HK2R2	E.CAPACITOR 50V 2.2U	1	
C2108,09	ECQM1H562JV	P.CAPACITOR 50V 5600P	2	
C2110	ECQV1H104JZ	P.CAPACITOR 50V 0.1U	1	
C2111	ECEA1CK101	E.CAPACITOR 16V 100U	1	
C2112	ECEA1EKN3R3	E.CAPACITOR 25V 3.3U	1	
C2113	ECKF1H471KB	C.CAPACITOR 50V 470P	1	
C2114	ECQV1H154JZ	P.CAPACITOR 50V 0.15U	1	
C2115	ECEA0JK470	E.CAPACITOR 6.3V 47U	1	
C2116	ECKF1H103ZF	C.CAPACITOR 50V 0.01U	1	
C2118	ECKF1H331KB	C.CAPACITOR 50V 330P	1	
C2119	ECQM1H562JV	P.CAPACITOR 50V 5600P	1	
C2120	ECEA1HK010	E.CAPACITOR 50V 1U	1	
C2121	ECEA1CK100	E.CAPACITOR 16V 10U	1	
C2123	ECKF1H272KB	C.CAPACITOR 50V 2700P	1	
C2126	ECKF1H103ZF	C.CAPACITOR 50V 0.01U	1	

Ref.No.	Part No.	Part Name & Description	Pcs	Remarks
C2127	ECKF1H152KB	C.CAPACITOR 50V 1500P	1	
C2128	ECEA1CK100	E.CAPACITOR 16V 10U	1	
C2132	ECKF1H103ZF	C.CAPACITOR 50V 0.01U	1	
C2133	ECKF1H331KB	C.CAPACITOR 50V 330P	1	
C2134	ECQM1H682JV	P.CAPACITOR 50V 6800P	1	
C2137	ECKF1H103ZF	C.CAPACITOR 50V 0.01U	1	
C2139	ECEA1CK100	E.CAPACITOR 16V 10U	1	
C2140	ECKF1H103ZF	C.CAPACITOR 50V 0.01U	1	
C2142,43	ECKF1H103ZF	C.CAPACITOR 50V 0.01U	2	
C2146-55	ECKF1H103ZF	C.CAPACITOR 50V 0.01U	10	
C2156	ECEA1CU331	E.CAPACITOR 16V 330U	1	
C2157-59	ECKF1H103ZF	C.CAPACITOR 50V 0.01U	3	
C2160	ECEA1CU331	E.CAPACITOR 16V 330U	1	
C2161	ECEA1HKR33	E.CAPACITOR 50V 0.33U	1	
C2162	ECEA0JK330	E.CAPACITOR 6.3V 33U	1	
C2167-69	ECKF1H103ZF	C.CAPACITOR 50V 0.01U	3	
C2184	ECEA1CK100	E.CAPACITOR 16V 10U	1	
C2187	ECCF1H100DC	C.CAPACITOR 50V 10P	1	
C2188	ECEA0JK470	E.CAPACITOR 6.3V 47U	1	
C2189	ECQV1H473JZ	P.CAPACITOR 50V 0.047U	1	
C2190	ECKF1H103ZF	C.CAPACITOR 50V 0.01U	1	
C2191	ECEA1CK220	E.CAPACITOR 16V 22U	1	
C2192	ECEA1CK101	E.CAPACITOR 16V 100U	1	
C2193	ECKF1H472ZF	C.CAPACITOR 50V 4700P	1	
C2194	ECQV1H154JZ	P.CAPACITOR 50V 0.15U	1	
C2195	ECQM1H102JV	P.CAPACITOR 50V 1000P	1	
C2196	ECKF1H391KB	C.CAPACITOR 50V 390P	1	
C2197-99	ECKF1H103ZF	C.CAPACITOR 50V 0.01U	3	
C2202	ECEA0JK101U	E.CAPACITOR 6.3V 100U	1	
C2203	ECCF1H100DC	C.CAPACITOR 50V 10P	1	
C2506	ECEA1CK470U	E.CAPACITOR 16V 47U	1	
C2507,08	ECQM1H102JV	P.CAPACITOR 50V 1000P	2	
C2512	ECEA0JK470	E.CAPACITOR 6.3V 47U	1	
C2513,14	ECCF1H680JC	C.CAPACITOR 50V 68P	2	
C2515	ECQV1H104JZ	P.CAPACITOR 50V 0.1U	1	
C2517	ECKF1H152KB	C.CAPACITOR 50V 1500P	1	
C2519	ECKF1H102KB	C.CAPACITOR 50V 1000P	1	
C2520	ECEA0JK470	E.CAPACITOR 6.3V 47U	1	
C2521,22	ECKF1H103ZF	C.CAPACITOR 50V 0.01U	2	
C2524	ECKF1H103ZF	C.CAPACITOR 50V 0.01U	1	
C2526-29	ECKF1H103ZF	C.CAPACITOR 50V 0.01U	4	
C2531	ECEA1CK470U	E.CAPACITOR 16V 47U	1	
C2532,33	ECKF1H103ZF	C.CAPACITOR 50V 0.01U	2	
C2535-37	ECKF1H103ZF	C.CAPACITOR 50V 0.01U	3	
C2551	ECCF1H100DC	C.CAPACITOR 50V 10P	1	
C2552	ECCF1H390JC	C.CAPACITOR 50V 39P	1	
C2553	ECKF1H561KB	C.CAPACITOR 50V 560P	1	
C2554	ECQM1H102JV	P.CAPACITOR 50V 1000P	1	
C2555	ECKF1H331KB	C.CAPACITOR 50V 330P	1	
C2556	ECEA1CK330U	E.CAPACITOR 16V 33U	1	
C2562	ECQM1H103JV	P.CAPACITOR 50V 0.01U	1	
C2563	ECEA1HK010	E.CAPACITOR 50V 1U	1	
D251-55	MA151A	DIODE	5	<R>
D2003-08	MA165	DIODE	6	<R>
D2009-11	10E1	DIODE	3	<R>
D2012-15	MA165	DIODE	4	<R>
D2017-19	MA165	DIODE	3	<R>
D2032	RD6.2EB	ZENER 6.2V	1	<R>
D2040	MA165	DIODE	1	<R>
D2044,45	MA165	DIODE	2	<R>
D2048,49	MA165	DIODE	2	<R>
D2051,52	MA165	DIODE	2	<R>
D2054-57	MA165	DIODE	4	<R>
D2077-84	MA165	DIODE	8	<R>
D2089	MA165	DIODE	1	<R>
D2502	MA165	DIODE	1	<R>
D2506	MA165	DIODE	1	<R>
D2551-55	MA165	DIODE	5	<R>
IC251	UPD4013BC	IC	1	<R>

Ref.No.		Part No.	Part Name & Description	Pcs	Remarks
IC252		BA222	IC	1	<R>
IC253		AN6914	IC	1	<R>
IC2001		UPD1511AC092	IC	1	<R>
IC2002		UPD1511AC103	IC	1	<R>
IC2003		UPC339C	IC	1	<R>
IC2004		UPD4013BC	IC	1	<R>
IC2005		UPD4071BC	IC	1	<R>
IC2006		AN6357N	IC	1	<R>
IC2007		AN6346N	IC	1	<R>
IC2008		MN6168VIA	IC	1	<R>
IC2009		AN640G	IC	1	<R>
IC2010,11		UPC358C	IC	2	<R>
IC2012		UPC393C	IC	1	<R>
IC2013		UPD4013BC	IC	1	<R>
IC2014		NJM4556D	IC	1	<R>
IC2015		UPD4053BC	IC	1	<R>
IC2016		UPD4030BC	IC	1	<R>
IC2017		UPD4066BC	IC	1	<R>
IC2018		UPD4053BC	IC	1	<R>
IC2019		UPD4001BC	IC	1	<R>
IC2020		UPD4030BC	IC	1	<R>
IC2021		UPD4066BC	IC	1	<R>
IC2022,23		UPD4516BC	IC	2	<R>
IC2024		AN6677	IC	1	<R>
IC2026		AN6913	IC	1	<R>
IC2028		UPD4013BC	IC	1	<R>
IC2033		UPC339C	IC	1	<R>
IC2034		AN6342N	IC	1	<R>
IC2035		UPD4013BC	IC	1	<R>
IC2036		UPD4066BC	IC	1	<R>
IC2038		AN78N12	IC	1	<R>
IC2039		UPC339C	IC	1	<R>
IC2040		MN51005VZQ	IC	1	<R>
IC2041		MC74HC04N	IC	1	<R>
IC2042		UPD4066BC	IC	1	<R>
IC2043		M51951BL	IC	1	<R>
IC2503		UPC4556C	IC	1	<R>
IC2504		UPC393C	IC	1	<R>
IC2505		UPD4013BC	IC	1	<R>
IC2506		UPD4538BC	IC	1	<R>
IC2507		UPD4040BC	IC	1	<R>
IC2508		UPD1511AC108	IC	1	<R>
IC2510		UPD4538BC	IC	1	<R>
IC2511		UPD4013BC	IC	1	<R>
IC2551		UPD4013BC	IC	1	<R>
IC2552		BA222	IC	1	<R>
IC2553		AN6914	IC	1	<R>
L251		VLQEL05F221K	COIL 220UH	1	
L2001		VLQEL05F470K	COIL 47UH	1	
L2002		VLQEL06F102K	COIL 1UH	1	
L2004		VLQEL05F470K	COIL 47UH	1	
L2005		VLQEL06F102K	COIL 1UH	1	
L2006		VLQEL05F102K	COIL 1000UH	1	
L2501		VLQEL05F470K	COIL 47UH	1	
L2551		VLQEL05F221K	COIL 220UH	1	
P001		VJP1238T	CONNECTOR(MALE) 11P	1	
P2001		VJP1234T	CONNECTOR(MALE) 7P	1	
P2002		VJP1230T	CONNECTOR(MALE) 3P	1	
P2003		VJP1235T	CONNECTOR(MALE) 8P	1	
P2004		VJP1235R	CONNECTOR(MALE) 8P	1	
P2005		VJP1235T	CONNECTOR(MALE) 8P	1	
P2006		VJP1233T	CONNECTOR(MALE) 6P	1	
P2007		VJP1232T	CONNECTOR(MALE) 5P	1	
P2008		VJP1229T	CONNECTOR(MALE) 2P	1	
P2009		VJP1229	CONNECTOR(MALE) 2P	1	
P2010		VJP1229T	CONNECTOR(MALE) 2P	1	
P2011		VJP1229	CONNECTOR(MALE) 2P	1	
P2012		VJP1230T	CONNECTOR(MALE) 3P	1	
P2013		VJP1229T	CONNECTOR(MALE) 2P	1	

Ref.No.		Part No.	Part Name & Description	Pcs	Remarks
P2014		VJP1231G	CONNECTOR(MALE) 4P	1	
P2017		VJP1232T	CONNECTOR(MALE) 5P	1	
P2018		VJP1229T	CONNECTOR(MALE) 2P	1	
P2019		VJP1229	CONNECTOR(MALE) 2P	1	
Q251		2SD601	TRANSISTOR CHIP	1	(Q,R)<R>
Q2001		2SC3811	TRANSISTOR	1	(Q,R)<R>
Q2003		2SD636	TRANSISTOR	1	(Q,R)<R>
Q2005-08		2SB641	TRANSISTOR	4	(Q,R)<R>
Q2009		2SD636	TRANSISTOR	1	(Q,R)<R>
Q2010		2SB641	TRANSISTOR	1	(Q,R)<R>
Q2011,12		2SD636	TRANSISTOR	2	(Q,R)<R>
Q2013		2SD637	TRANSISTOR	1	(Q,R)<R>
Q2014		2SB941	TRANSISTOR	1	(P,Q)<R>
Q2015		2SD637	TRANSISTOR	1	(Q,R)<R>
Q2016		2SB941	TRANSISTOR	1	(P,Q)<R>
Q2017		2SD637	TRANSISTOR	1	(Q,R)<R>
Q2018		2SB941	TRANSISTOR	1	(P,Q)<R>
Q2019-21		2SD1266	TRANSISTOR	3	(P,Q)<R>
Q2022-26		2SD636	TRANSISTOR	5	(Q,R)<R>
Q2028-31		2SD636	TRANSISTOR	4	(Q,R)<R>
Q2035		2SD1266	TRANSISTOR	1	(P,Q)<R>
Q2036,37		2SB641	TRANSISTOR	2	(Q,R)<R>
Q2038		2SD636	TRANSISTOR	1	(Q,R)<R>
Q2039-41		2SB641	TRANSISTOR	3	(Q,R)<R>
Q2046		2SD636	TRANSISTOR	1	(Q,R)<R>
Q2050,51		2SD636	TRANSISTOR	2	(Q,R)<R>
Q2056		2SD636	TRANSISTOR	1	(Q,R)<R>
Q2061		2SB641	TRANSISTOR	1	(Q,R)<R>
Q2062		2SD1330	TRANSISTOR	1	(S,T)<R>
Q2063		2SD636	TRANSISTOR	1	(Q,R)<R>
Q2065		2SC3811	TRANSISTOR	1	(Q,R)<R>
Q2551		2SD636	TRANSISTOR	1	(Q,R)<R>
QR2001,02		UN1213	TRANSISTOR-RESISTOR	2	<R>
QR2003		UN1215	TRANSISTOR-RESISTOR	1	<R>
QR2004		UN1213	TRANSISTOR-RESISTOR	1	<R>
QR2007		UN1211	TRANSISTOR-RESISTOR	1	<R>
QR2010-12		UN1213	TRANSISTOR-RESISTOR	3	<R>
QR2014		UN1212	TRANSISTOR-RESISTOR	1	<R>
QR2015		UN1211	TRANSISTOR-RESISTOR	1	<R>
QR2017,18		UN1213	TRANSISTOR-RESISTOR	2	<R>
QR2019		UN1113	TRANSISTOR-RESISTOR	1	<R>
QR2025		UN1213	TRANSISTOR-RESISTOR	1	<R>
QR2028		UN1215	TRANSISTOR-RESISTOR	1	<R>
QR2029		UN1213	TRANSISTOR-RESISTOR	1	<R>
QR2030		UN1212	TRANSISTOR-RESISTOR	1	<R>
QR2032		UN1213	TRANSISTOR-RESISTOR	1	<R>
QR2035		UN1213	TRANSISTOR-RESISTOR	1	<R>
QR2038		UN1213	TRANSISTOR-RESISTOR	1	<R>
QR2050		UN1213	TRANSISTOR-RESISTOR	1	<R>
QR2052,53		UN1213	TRANSISTOR-RESISTOR	2	<R>
QR2059		UN1213	TRANSISTOR-RESISTOR	1	<R>
QR2061		UN1213	TRANSISTOR-RESISTOR	1	<R>
QR2506		UN1112	TRANSISTOR-RESISTOR	1	<R>
R251		ERJ6GEYJ103	M.RESISTOR CH 1/10W 10K	1	
R252		ERJ6GEYJ273	M.RESISTOR CH 1/10W 27K	1	
R253		ERJ6GEYJ224	M.RESISTOR CH 1/10W 220K	1	
R254-56		ERJ6GEYJ103	M.RESISTOR CH 1/10W 10K	3	
R257		ERJ6GEYJ105	M.RESISTOR CH 1/10W 1M	1	
R258		ERJ6GEYJ393	M.RESISTOR CH 1/10W 39K	1	
R259		ERJ6GEYJ103	M.RESISTOR CH 1/10W 10K	1	
R260		ERJ6GEYJ104	M.RESISTOR CH 1/10W 100K	1	
R261		ERJ6GEYJ103	M.RESISTOR CH 1/10W 10K	1	
R2001		ERDS2TJ223	C.RESISTOR 1/4W 22K	1	
R2002		ERDS2TJ104	C.RESISTOR 1/4W 100K	1	
R2003-05		ERDS2TJ103	C.RESISTOR 1/4W 10K	3	
R2010		ERDS2TJ104	C.RESISTOR 1/4W 100K	1	

Ref.No.	Part No.	Part Name & Description	Pcs	Remarks
R2011	ERDS2TJ103	C.RESISTOR 1/4W 10K	1	
R2012	ERDS2TJ562	C.RESISTOR 1/4W 5.6K	1	
R2013,14	ERDS2TJ104	C.RESISTOR 1/4W 100K	2	
R2015	ERDS2TJ473	C.RESISTOR 1/4W 47K	1	
R2017	ERDS2TJ473	C.RESISTOR 1/4W 47K	1	
R2018	ERDS2TJ104	C.RESISTOR 1/4W 100K	1	
R2019	ERDS2TJ563	C.RESISTOR 1/4W 56K	1	
R2020,21	ERDS2TJ104	C.RESISTOR 1/4W 100K	2	
R2022	ERDS2TJ332	C.RESISTOR 1/4W 3.3K	1	
R2023	ERDS2TJ105	C.RESISTOR 1/4W 1000K	1	
R2024	ERDS2TJ332	C.RESISTOR 1/4W 3.3K	1	
R2025,26	ERDS2TJ104	C.RESISTOR 1/4W 100K	2	
R2027	ERDS2TJ563	C.RESISTOR 1/4W 56K	1	
R2028,29	ERDS2TJ103	C.RESISTOR 1/4W 10K	2	
R2030,31	ERDS2TJ473	C.RESISTOR 1/4W 47K	2	
R2032	ERDS2TJ563	C.RESISTOR 1/4W 56K	1	
R2033	ERDS2TJ473	C.RESISTOR 1/4W 47K	1	
R2034	ERDS2TJ562	C.RESISTOR 1/4W 5.6K	1	
R2035	ERDS2TJ153	C.RESISTOR 1/4W 15K	1	
R2036	ERDS2TJ223	C.RESISTOR 1/4W 22K	1	
R2037	ERDS2TJ823	C.RESISTOR 1/4W 82K	1	
R2038	ERDS2TJ560	C.RESISTOR 1/4W 56	1	
R2039	ERDS2CKG1002	M.RESISTOR 1/4W 10K	1	
R2040	ERDS2CKG6802	M.RESISTOR 1/4W 68K	1	
R2041	ERDS2CKG1202	M.RESISTOR 1/4W 12K	1	
R2042	ERDS2TJ224	C.RESISTOR 1/4W 220K	1	
R2043,44	ERDS2TJ103	C.RESISTOR 1/4W 10K	2	
R2045	ERDS2TJ473	C.RESISTOR 1/4W 47K	1	
R2046	ERDS2TJ104	C.RESISTOR 1/4W 100K	1	
R2047	ERDS2CKG5602	M.RESISTOR 1/4W 56K	1	
R2048	ERDS2CKG1002	M.RESISTOR 1/4W 10K	1	
R2049	ERDS2CKG8200	M.RESISTOR 1/4W 820	1	
R2050	ERDS2TJ471	C.RESISTOR 1/4W 470	1	
R2051	ERDS2TJ821	C.RESISTOR 1/4W 820	1	
R2052	ERDS2TJ472	C.RESISTOR 1/4W 4.7K	1	
R2053,54	ERDS2TJ102	C.RESISTOR 1/4W 1K	2	
R2055	ERDS2TJ104	C.RESISTOR 1/4W 100K	1	
R2056	ERDS2CKG4700	M.RESISTOR 1/4W 470	1	
R2057	ERDS2TJ103	C.RESISTOR 1/4W 10K	1	
R2058	ERG12ANJ820	M.RESISTOR 1/2W 82	1	
R2059	ERDS2TJ103	C.RESISTOR 1/4W 10K	1	
R2060	ERG12ANJ820	M.RESISTOR 1/2W 82	1	
R2061	ERDS2TJ103	C.RESISTOR 1/4W 10K	1	
R2062	ERG12ANJ820	M.RESISTOR 1/2W 82	1	
R2063-66	ERDS2TJ151	C.RESISTOR 1/4W 150	4	
R2067	ERDS2TJ103	C.RESISTOR 1/4W 10K	1	
R2068	ERDS2TJ151	C.RESISTOR 1/4W 150	1	
R2069	ERDS2TJ103	C.RESISTOR 1/4W 10K	1	
R2070	ERDS2TJ151	C.RESISTOR 1/4W 150	1	
R2071	ERDS2TJ103	C.RESISTOR 1/4W 10K	1	
R2072	ERX1SJ1R0	M.RESISTOR 1W 1.0	1	
R2073	ERDS2TJ472	C.RESISTOR 1/4W 4.7K	1	
R2074,75	ERDS2TJ333	C.RESISTOR 1/4W 33K	2	
R2076	ERDS2TJ102	C.RESISTOR 1/4W 1K	1	
R2077	ERDS2TJ471	C.RESISTOR 1/4W 470	1	
R2078	ERDS2TJ223	C.RESISTOR 1/4W 22K	1	
R2079	ERDS2TJ391	C.RESISTOR 1/4W 390	1	
R2080	ERDS2TJ223	C.RESISTOR 1/4W 22K	1	
R2081	ERDS2TJ224	C.RESISTOR 1/4W 220K	1	
R2082	ERDS2TJ391	C.RESISTOR 1/4W 390	1	
R2083	ERDS2TJ223	C.RESISTOR 1/4W 22K	1	
R2084	ERDS2TJ471	C.RESISTOR 1/4W 470	1	
R2085	ERDS2TJ223	C.RESISTOR 1/4W 22K	1	
R2086	ERDS2TJ224	C.RESISTOR 1/4W 220K	1	
R2087,88	ERDS2TJ272	C.RESISTOR 1/4W 2.7K	2	
R2089	ERDS2TJ392	C.RESISTOR 1/4W 3.9K	1	
R2090	ERDS2TJ103	C.RESISTOR 1/4W 10K	1	
R2091	ERDS2TJ222	C.RESISTOR 1/4W 2.2K	1	
R2092	ERDS2TJ103	C.RESISTOR 1/4W 10K	1	
R2093	ERDS2TJ470	C.RESISTOR 1/4W 47	1	
R2094	ERDS2TJ122	C.RESISTOR 1/4W 1.2K	1	
R2095,96	ERDS2TJ103	C.RESISTOR 1/4W 10K	2	
R2097	ERDS2TJ563	C.RESISTOR 1/4W 56K	1	
R2098	ERDS2TJ123	C.RESISTOR 1/4W 12K	1	
R2100	ERDS2TJ393	C.RESISTOR 1/4W 39K	1	

Ref.No.	Part No.	Part Name & Description	Pcs	Remarks
R2101	ERDS2TJ823	C.RESISTOR 1/4W 82K	1	
R2103	ERDS2TJ683	C.RESISTOR 1/4W 68K	1	
R2104	ERDS2TJ682	C.RESISTOR 1/4W 6.8K	1	
R2105	ERDS2TJ102	C.RESISTOR 1/4W 1K	1	
R2106	ERDS2TJ333	C.RESISTOR 1/4W 33K	1	
R2107	ERDS2TJ563	C.RESISTOR 1/4W 56K	1	
R2108	ERDS2TJ222	C.RESISTOR 1/4W 2.2K	1	
R2109	ERDS2TJ121	C.RESISTOR 1/4W 120	1	
R2110,11	ERDS2TJ102	C.RESISTOR 1/4W 1K	2	
R2112	ERDS2TJ333	C.RESISTOR 1/4W 33K	1	
R2113	ERDS2TJ223	C.RESISTOR 1/4W 22K	1	
R2114	ERDS2TJ394	C.RESISTOR 1/4W 390K	1	
R2115	ERDS2TJ151	C.RESISTOR 1/4W 150	1	
R2116	ERDS2TJ105	C.RESISTOR 1/4W 1000K	1	
R2117	ERDS2TJ333	C.RESISTOR 1/4W 33K	1	
R2118	ERDS2TJ103	C.RESISTOR 1/4W 10K	1	
R2119	ERDS2TJ154	C.RESISTOR 1/4W 150K	1	
R2120	ERDS2TJ184	C.RESISTOR 1/4W 180K	1	
R2121	ERDS2TJ103	C.RESISTOR 1/4W 10K	1	
R2122,23	ERDS2TJ563	C.RESISTOR 1/4W 56K	2	
R2124	ERDS2TJ103	C.RESISTOR 1/4W 10K	1	
R2126	ERDS2TJ823	C.RESISTOR 1/4W 82K	1	
R2127,28	ERDS2TJ333	C.RESISTOR 1/4W 33K	2	
R2129,30	ERDS2TJ104	C.RESISTOR 1/4W 100K	2	
R2140	ERDS2TJ103	C.RESISTOR 1/4W 10K	1	
R2141	ERDS2TJ222	C.RESISTOR 1/4W 2.2K	1	
R2142	ERDS2TJ392	C.RESISTOR 1/4W 3.9K	1	
R2143	ERDS2TJ123	C.RESISTOR 1/4W 12K	1	
R2144,45	ERDS2TJ103	C.RESISTOR 1/4W 10K	2	
R2146	ERDS2TJ274	C.RESISTOR 1/4W 270K	1	
R2147	ERDS2TJ561	C.RESISTOR 1/4W 560	1	
R2148	ERDS2TJ473	C.RESISTOR 1/4W 47K	1	
R2151	ERDS2TJ183	C.RESISTOR 1/4W 18K	1	
R2153,54	ERDS2TJ103	C.RESISTOR 1/4W 10K	2	
R2156	ERDS2TJ104	C.RESISTOR 1/4W 100K	1	
R2157	ERDS2TJ681	C.RESISTOR 1/4W 680	1	
R2158	ERDS2TJ151	C.RESISTOR 1/4W 150	1	
R2159	ERDS2TJ103	C.RESISTOR 1/4W 10K	1	
R2160	ERDS2TJ223	C.RESISTOR 1/4W 22K	1	
R2161,62	ERDS2TJ103	C.RESISTOR 1/4W 10K	2	
R2163	ERDS2TJ222	C.RESISTOR 1/4W 2.2K	1	
R2165	ERDS2TJ103	C.RESISTOR 1/4W 10K	1	
R2168,69	ERDS2TJ682	C.RESISTOR 1/4W 6.8K	2	
R2190	ERX12SJ1R0	M.RESISTOR 1/2W 1	1	
R2191-93	ERDS2TJ470	C.RESISTOR 1/4W 47	3	
R2194	ERDS2TJ224	C.RESISTOR 1/4W 220K	1	
R2195	ERDS2TJ153	C.RESISTOR 1/4W 15K	1	
R2196	ERDS2TJ332	C.RESISTOR 1/4W 3.3K	1	
R2197	ERDS2TJ222	C.RESISTOR 1/4W 2.2K	1	
R2198	ERDS2TJ103	C.RESISTOR 1/4W 10K	1	
R2200	ERDS2TJ183	C.RESISTOR 1/4W 18K	1	
R2201,02	ERDS2TJ154	C.RESISTOR 1/4W 150K	2	
R2203	ERDS2TJ224	C.RESISTOR 1/4W 220K	1	
R2204	ERDS2TJ223	C.RESISTOR 1/4W 22K	1	
R2205	ERDS2TJ822	C.RESISTOR 1/4W 8.2K	1	
R2206	ERDS2TJ333	C.RESISTOR 1/4W 33K	1	
R2207	ERDS2TJ103	C.RESISTOR 1/4W 10K	1	
R2208	ERDS2TJ683	C.RESISTOR 1/4W 68K	1	
R2209	ERDS2TJ333	C.RESISTOR 1/4W 33K	1	
R2210,11	ERDS2TJ103	C.RESISTOR 1/4W 10K	2	
R2213	ERDS2TJ823	C.RESISTOR 1/4W 82K	1	
R2214	ERDS2TJ103	C.RESISTOR 1/4W 10K	1	
R2215,16	ERDS2TJ222	C.RESISTOR 1/4W 2.2K	2	
R2217	ERDS2TJ333	C.RESISTOR 1/4W 33K	1	
R2218,19	ERDS2TJ103	C.RESISTOR 1/4W 10K	2	
R2220	ERDS2TJ104	C.RESISTOR 1/4W 100K	1	
R2221-23	ERDS2TJ103	C.RESISTOR 1/4W 10K	3	
R2224	ERDS2TJ563	C.RESISTOR 1/4W 56K	1	
R2225	ERDS2TJ104	C.RESISTOR 1/4W 100K	1	
R2226	ERDS2TJ222	C.RESISTOR 1/4W 2.2K	1	
R2227	ERDS2TJ103	C.RESISTOR 1/4W 10K	1	
R2230	ERDS2TJ102	C.RESISTOR 1/4W 1K	1	
R2231,32	ERDS2TJ333	C.RESISTOR 1/4W 33K	2	
R2233	ERDS2TJ473	C.RESISTOR 1/4W 47K	1	
R2234	ERD25TJ395	C.RESISTOR 1/4W 3.9M	1	

Ref.No.		Part No.	Part Name & Description	Pcs	Remarks
R2235		ERDS2TJ102	C.RESISTOR 1/4W 1K	1	
R2236		ERDS2TJ104	C.RESISTOR 1/4W 100K	1	
R2237		ERDS2TJ103	C.RESISTOR 1/4W 10K	1	
R2238		ERDS2TJ104	C.RESISTOR 1/4W 100K	1	
R2239		ERDS2TJ333	C.RESISTOR 1/4W 33K	1	
R2240,41		ERDS2TJ682	C.RESISTOR 1/4W 6.8K	2	
R2244		ERDS2TJ104	C.RESISTOR 1/4W 100K	1	
R2245		ERDS2TJ473	C.RESISTOR 1/4W 47K	1	
R2246		ERDS2TJ105	C.RESISTOR 1/4W 1000K	1	
R2247		ERDS2TJ104	C.RESISTOR 1/4W 100K	1	
R2248,49		ERDS2TJ274	C.RESISTOR 1/4W 270K	2	
R2252		ERDS2TJ103	C.RESISTOR 1/4W 10K	1	
R2258		ERDS2TJ332	C.RESISTOR 1/4W 3.3K	1	
R2260		ERDS2TJ153	C.RESISTOR 1/4W 15K	1	
R2264		ERDS2TJ153	C.RESISTOR 1/4W 15K	1	
R2286		ERDS2TJ274	C.RESISTOR 1/4W 270K	1	
R2287		ERDS2TJ223	C.RESISTOR 1/4W 22K	1	
R2289		ERDS2TJ103	C.RESISTOR 1/4W 10K	1	
R2292		ERDS2TJ472	C.RESISTOR 1/4W 4.7K	1	
R2296,97		ERDS2TJ223	C.RESISTOR 1/4W 22K	2	
R2300		ERDS2TJ103	C.RESISTOR 1/4W 10K	1	
R2302		ERDS2TJ103	C.RESISTOR 1/4W 10K	1	
R2312		ERDS2TJ104	C.RESISTOR 1/4W 100K	1	
R2313		ERDS2TJ682	C.RESISTOR 1/4W 6.8K	1	
R2314		ERDS2TJ224	C.RESISTOR 1/4W 220K	1	
R2315		ERDS2TJ102	C.RESISTOR 1/4W 1K	1	
R2316-18		ERDS2TJ224	C.RESISTOR 1/4W 220K	3	
R2319		ERDS2TJ102	C.RESISTOR 1/4W 1K	1	
R2320		ERDS2TJ103	C.RESISTOR 1/4W 10K	1	
R2345		ERDS2TJ102	C.RESISTOR 1/4W 1K	1	
R2357		ERDS2TJ473	C.RESISTOR 1/4W 47K	1	
R2364,65		ERQ12RJ1R5	FUSE 1/2W 1.5	2	
R2367,68		ERDS2TJ472	C.RESISTOR 1/4W 4.7K	2	
R2369		ERDS2TJ564	C.RESISTOR 1/4W 560K	1	
R2370		ERDS2TJ104	C.RESISTOR 1/4W 100K	1	
R2371		ERDS2TJ563	C.RESISTOR 1/4W 56K	1	
R2372		ERDS2TJ822	C.RESISTOR 1/4W 8.2K	1	
R2374		ERDS2TJ561	C.RESISTOR 1/4W 560	1	
R2378		ERDS2TJ224	C.RESISTOR 1/4W 220K	1	
R2379		ERDS2TJ102	C.RESISTOR 1/4W 1K	1	
R2380,81		ERDS2TJ105	C.RESISTOR 1/4W 1000K	2	
R2384		ERDS2TJ683	C.RESISTOR 1/4W 68K	1	
R2385		ERDS2TJ104	C.RESISTOR 1/4W 100K	1	
R2386,87		ERDS2TJ103	C.RESISTOR 1/4W 10K	2	
R2388		ERDS2TJ104	C.RESISTOR 1/4W 100K	1	
R2389		ERDS2TJ472	C.RESISTOR 1/4W 4.7K	1	
R2390		ERDS2TJ150	C.RESISTOR 1/4W 15	1	
R2391		ERDS2TJ104	C.RESISTOR 1/4W 100K	1	
R2396		ERDS2TJ103	C.RESISTOR 1/4W 10K	1	
R2397,98		ERDS2TJ104	C.RESISTOR 1/4W 100K	2	
R2399		ERDS2TJ103	C.RESISTOR 1/4W 10K	1	
R2402		ERDS2TJ222	C.RESISTOR 1/4W 2.2K	1	
R2406		ERDS2TJ102	C.RESISTOR 1/4W 1K	1	
R2407		ERDS2TJ562	C.RESISTOR 1/4W 5.6K	1	
R2408		ERDS2TJ102	C.RESISTOR 1/4W 1K	1	
R2409		ERDS2TJ103	C.RESISTOR 1/4W 10K	1	
R2513		ERDS2TJ104	C.RESISTOR 1/4W 100K	1	
R2514		ERDS2TJ103	C.RESISTOR 1/4W 10K	1	
R2515		ERDS2TJ473	C.RESISTOR 1/4W 47K	1	
R2516		ERDS2TJ563	C.RESISTOR 1/4W 56K	1	
R2517,18		ERDS2TJ102	C.RESISTOR 1/4W 1K	2	
R2521		ERDS2TJ103	C.RESISTOR 1/4W 10K	1	
R2523		ERDS2TJ103	C.RESISTOR 1/4W 10K	1	
R2525		ERDS2TJ104	C.RESISTOR 1/4W 100K	1	
R2535		ERDS2TJ104	C.RESISTOR 1/4W 100K	1	
R2543		ERDS2TJ224	C.RESISTOR 1/4W 220K	1	
R2545		ERDS2TJ224	C.RESISTOR 1/4W 220K	1	
R2549		ERDS2TJ103	C.RESISTOR 1/4W 10K	1	
R2550		ERDS2TJ474	C.RESISTOR 1/4W 470K	1	
R2551		ERDS2TJ103	C.RESISTOR 1/4W 10K	1	
R2552		ERDS2TJ273	C.RESISTOR 1/4W 27K	1	
R2553		ERDS2TJ224	C.RESISTOR 1/4W 220K	1	
R2554-56		ERDS2TJ103	C.RESISTOR 1/4W 10K	3	
R2557		ERDS2TJ105	C.RESISTOR 1/4W 1000K	1	
R2558		ERDS2TJ393	C.RESISTOR 1/4W 39K	1	

Ref.No.		Part No.	Part Name & Description	Pcs	Remarks
R2559		ERDS2TJ103	C.RESISTOR 1/4W 10K	1	
R2560		ERDS2TJ104	C.RESISTOR 1/4W 100K	1	
R2561		ERDS2TJ103	C.RESISTOR 1/4W 10K	1	
R2564		ERDS2TJ122	C.RESISTOR 1/4W 1.2K	1	
R2574		ERDS2TJ104	C.RESISTOR 1/4W 100K	1	
R2575		ERDS2TJ102	C.RESISTOR 1/4W 1K	1	
R2576		ERDS2TJ224	C.RESISTOR 1/4W 220K	1	
R2577		ERDS2TJ223	C.RESISTOR 1/4W 22K	1	
R2578,79		ERDS2TJ103	C.RESISTOR 1/4W 10K	2	
RA2001,02		EXBP84103K	RESISTOR&RESISTOR 10K	2	
RA2003,04		EXBP87103K	RESISTOR&RESISTOR 10K	2	
VR2001		EVM38GA00B54	V.RESISTOR 50K	1	
VR2007,08		EVM38GA00B54	V.RESISTOR 50K	2	
VR2011		EVM38GA00B24	V.RESISTOR 20K	1	
X2001,02		VSX0128	CRYSTAL OSCILLATOR	2	<R>
X2501		VSX0128	CRYSTAL OSCILLATOR	1	<R>
			MISCELLANEOUS		
E46		VSC0495	HEAT SINK	2	
E47		VMX1028	SUPPORT	2	
E48		VMX0985	SPACER	1	
E49		VKC0129	HINGE	2	
	■	VEP02224E	REEL SERVO C.B.A.		
C2701		ECKF1H561KB	C.CAPACITOR 50V 560P	1	
C2702		ECQM1H333JV	P.CAPACITOR 50V 0.033U	1	
C2703		ECKF1H561KB	C.CAPACITOR 50V 560P	1	
C2704		ECEA1HK010	E.CAPACITOR 50V 1U	1	
C2705		ECEA1HKR47	E.CAPACITOR 50V 0.47U	1	
C2706		ECEA1HK2R2	E.CAPACITOR 50V 2.2U	1	
C2707		ECQM1H333JV	P.CAPACITOR 50V 0.033U	1	
C2708,09		ECEA1CK100	E.CAPACITOR 16V 10U	2	
C2710		ECEA1HK010	E.CAPACITOR 50V 1U	1	
C2711		ECEA1HKR47	E.CAPACITOR 50V 0.47U	1	
C2712		ECEA0JU102	E.CAPACITOR 6.3V 1000U	1	
C2713		ECQM1H563JV	P.CAPACITOR 50V 0.056U	1	
C2714		ECQM1H123JV	P.CAPACITOR 50V 0.012U	1	
C2715		ECEA1CKN220	E.CAPACITOR 16V 22U	1	
C2716		ECQM1H823JV	P.CAPACITOR 50V 0.082U	1	
C2717		ECQM1H222JV	P.CAPACITOR 50V 2200P	1	
C2718		ECEA1CKN220	E.CAPACITOR 16V 22U	1	
C2719		ECQM1H223JV	P.CAPACITOR 50V 0.022U	1	
C2720		ECQM1H222JV	P.CAPACITOR 50V 2200P	1	
C2721		ECEA1CN470S	E.CAPACITOR 16V 47U	1	
C2722		ECQM1H103JV	P.CAPACITOR 50V 0.01U	1	
C2723		ECKF1H182KB	C.CAPACITOR 50V 1800P	1	
C2724		ECKF1H103ZF	C.CAPACITOR 50V 0.01U	1	
C2726		ECEA1EU221	E.CAPACITOR 25V 220U	1	
C2727		ECQM1H103JV	P.CAPACITOR 50V 0.01U	1	
C2728		ECKF1H103ZF	C.CAPACITOR 50V 0.01U	1	
C2729		ECQV1H154JZ	P.CAPACITOR 50V 0.15U	1	
C2730		ECKF1H103ZF	C.CAPACITOR 50V 0.01U	1	
C2732		ECEA1EU221	E.CAPACITOR 25V 220U	1	
C2733		ECQM1H103JV	P.CAPACITOR 50V 0.01U	1	
C2734		ECKF1H103ZF	C.CAPACITOR 50V 0.01U	1	
C2735		ECQV1H154JZ	P.CAPACITOR 50V 0.15U	1	
C2736,37		ECKF1H103ZF	C.CAPACITOR 50V 0.01U	2	

Ref.No.	Part No.	Part Name & Description	Pcs	Remarks
C2738	ECCF1H680JC	C.CAPACITOR 50V 68P	1	
C2739	ECCF1H680KC	C.CAPACITOR 50V 68P	1	
C2740	ECEA1CK470	E.CAPACITOR 16V 47U	1	
C2741	ECKF1H103ZF	C.CAPACITOR 50V 0.01U	1	
C2742,43	ECEA1CK101	E.CAPACITOR 16V 100U	2	
C2744,45	ECEA1EU331	E.CAPACITOR 25V 330U	2	
C2746,47	ECKF1H103ZF	C.CAPACITOR 50V 0.01U	2	
C2751,52	ECKF1H103ZF	C.CAPACITOR 50V 0.01U	2	
C2753	ECEA1HKR47	E.CAPACITOR 50V 0.47U	1	
C2754	ECEA1CK470	E.CAPACITOR 16V 47U	1	
C2755-60	ECKF1H103ZF	C.CAPACITOR 50V 0.01U	6	
C2766	ECKF1H103ZF	C.CAPACITOR 50V 0.01U	1	
C2767	ECEA1VU470	E.CAPACITOR 35V 47U	1	
D2701-06	MA165	DIODE	6	<R>
D2707,08	ERA81004G	DIODE	2	<R>
D2709-17	MA165	DIODE	9	<R>
D2722,23	MA165	DIODE	2	<R>
D2729,30	MA165	DIODE	2	<R>
D2737,38	MA165	DIODE	2	<R>
D2741-43	MA165	DIODE	3	<R>
D2745,46	MA165	DIODE	2	<R>
D2747	MA4130M	DIODE	1	<R>
IC2701	UPC393C	IC	1	<R>
IC2702-05	UPC324C	IC	4	<R>
IC2706	UPC339C	IC	1	<R>
IC2707	UPC393C	IC	1	<R>
IC2708	UPD4030BC	IC	1	<R>
IC2709	UPD4069UBC	IC	1	<R>
IC2710	UPD4030BC	IC	1	<R>
IC2711,12	UPD4066BC	IC	2	<R>
IC2714	UPC339C	IC	1	<R>
IC2715	UPC358C	IC	1	<R>
IC2716	UPD1511AC106	IC	1	<R>
IC2717	UPC393C	IC	1	<R>
L2701	VLQEL05F470K	COIL 47UH	1	
L2702	VLQEL06F221K	COIL 220UH	1	
L2704,05	VLT0193	TRANSFORMER	2	
P2700	VJP1233T	CONNECTOR(MALE) 6P	1	
P2701	VJP1231B	CONNECTOR(MALE) 4P	1	
P2702	VJP1231T	CONNECTOR(MALE) 4P	1	
P2703	VJP1233T	CONNECTOR(MALE) 6P	1	
P2704	VJP1231G	CONNECTOR(MALE) 4P	1	
P2705	VJP1231R	CONNECTOR(MALE) 4P	1	
P2706	VJP1247T	CONNECTOR(MALE) 7P	1	
Q2701	2SB641	TRANSISTOR	1	(Q,R)<R>
Q2702	2SC2497	TRANSISTOR	1	(Q,R)<R>
Q2703	2SA1096	TRANSISTOR	1	(Q,R)<R>
Q2704	2SB641	TRANSISTOR	1	(Q,R)<R>
Q2705	2SC2497	TRANSISTOR	1	(Q,R)<R>
Q2706	2SA1096	TRANSISTOR	1	(Q,R)<R>
Q2707,08	2SD636	TRANSISTOR	2	(Q,R)<R>
Q2709	2SC3811	TRANSISTOR	1	(Q,R)<R>
Q2710,11	2SD636	TRANSISTOR	2	(Q,R)<R>
QR2701,02	UN1213	TRANSISTOR-RESISTOR	2	<R>
QR2704	UN1213	TRANSISTOR-RESISTOR	1	<R>
QR2706	UN1213	TRANSISTOR-RESISTOR	1	<R>
QR2708	UN1213	TRANSISTOR-RESISTOR	1	<R>

Ref.No.	Part No.	Part Name & Description	Pcs	Remarks
QR2712,13	UN1213	TRANSISTOR-RESISTOR	2	<R>
QR2715-26	UN1213	TRANSISTOR-RESISTOR	12	<R>
R2701	ERDS2TJ681	C.RESISTOR 1/4W 680	1	
R2702	ERDS2TJ273	C.RESISTOR 1/4W 27K	1	
R2703	ERDS2TJ682	C.RESISTOR 1/4W 6.8K	1	
R2704	ERDS2TJ104	C.RESISTOR 1/4W 100K	1	
R2705	ERDS2TJ333	C.RESISTOR 1/4W 33K	1	
R2706	ERDS2TJ104	C.RESISTOR 1/4W 100K	1	
R2707	ERDS2TJ154	C.RESISTOR 1/4W 150K	1	
R2708	ERDS2TJ222	C.RESISTOR 1/4W 2.2K	1	
R2709,10	ERDS2TJ333	C.RESISTOR 1/4W 33K	2	
R2711	ERDS2TJ152	C.RESISTOR 1/4W 1.5K	1	
R2712	ERDS2TJ103	C.RESISTOR 1/4W 10K	1	
R2713	ERDS2TJ682	C.RESISTOR 1/4W 6.8K	1	
R2714	ERDS2TJ104	C.RESISTOR 1/4W 100K	1	
R2715	ERDS2TJ333	C.RESISTOR 1/4W 33K	1	
R2716	ERDS2TJ104	C.RESISTOR 1/4W 100K	1	
R2717	ERDS2TJ154	C.RESISTOR 1/4W 150K	1	
R2718	ERDS2TJ222	C.RESISTOR 1/4W 2.2K	1	
R2719,20	ERDS2TJ333	C.RESISTOR 1/4W 33K	2	
R2721	ERDS2TJ152	C.RESISTOR 1/4W 1.5K	1	
R2722	ERDS2TJ103	C.RESISTOR 1/4W 10K	1	
R2723	ERDS2TJ333	C.RESISTOR 1/4W 33K	1	
R2724	ERDS2TJ103	C.RESISTOR 1/4W 10K	1	
R2725	ERDS2TJ473	C.RESISTOR 1/4W 47K	1	
R2726	ERDS2TJ152	C.RESISTOR 1/4W 1.5K	1	
R2727	ERDS2TJ102	C.RESISTOR 1/4W 1K	1	
R2728-30	ERDS2TJ103	C.RESISTOR 1/4W 10K	3	
R2731	ERDS2TJ332	C.RESISTOR 1/4W 3.3K	1	
R2732	ERDS2TJ223	C.RESISTOR 1/4W 22K	1	
R2733	ERDS2TJ681	C.RESISTOR 1/4W 680	1	
R2734	ERDS2TJ273	C.RESISTOR 1/4W 27K	1	
R2735	ERDS2TJ681	C.RESISTOR 1/4W 680	1	
R2736	ERDS2TJ273	C.RESISTOR 1/4W 27K	1	
R2737,38	ERDS2TJ472	C.RESISTOR 1/4W 4.7K	2	
R2739	ERDS2TJ224	C.RESISTOR 1/4W 220K	1	
R2740	ERDS2TJ153	C.RESISTOR 1/4W 15K	1	
R2741	ERDS2TJ104	C.RESISTOR 1/4W 100K	1	
R2742	ERDS2TJ103	C.RESISTOR 1/4W 10K	1	
R2743	ERDS2TJ333	C.RESISTOR 1/4W 33K	1	
R2744	ERDS2TJ103	C.RESISTOR 1/4W 10K	1	
R2745	ERDS2TJ104	C.RESISTOR 1/4W 100K	1	
R2746	ERDS2TJ102	C.RESISTOR 1/4W 1K	1	
R2747,48	ERDS2TJ103	C.RESISTOR 1/4W 10K	2	
R2749,50	ERDS2TJ472	C.RESISTOR 1/4W 4.7K	2	
R2751	ERDS2TJ105	C.RESISTOR 1/4W 1000K	1	
R2753	ERDS2TJ224	C.RESISTOR 1/4W 220K	1	
R2754	ERDS2TJ153	C.RESISTOR 1/4W 15K	1	
R2755	ERDS2TJ123	C.RESISTOR 1/4W 12K	1	
R2756	ERDS2TJ683	C.RESISTOR 1/4W 68K	1	
R2757	ERDS2TJ103	C.RESISTOR 1/4W 10K	1	
R2758	ERDS2TJ333	C.RESISTOR 1/4W 33K	1	
R2759	ERDS2TJ103	C.RESISTOR 1/4W 10K	1	
R2760	ERDS2TJ104	C.RESISTOR 1/4W 100K	1	
R2761	ERDS2TJ102	C.RESISTOR 1/4W 1K	1	
R2762	ERDS2TJ103	C.RESISTOR 1/4W 10K	1	
R2763	ERDS2TJ332	C.RESISTOR 1/4W 3.3K	1	
R2764	ERDS2TJ103	C.RESISTOR 1/4W 10K	1	
R2766	ERDS2TJ103	C.RESISTOR 1/4W 10K	1	
R2767,68	ERDS2TJ472	C.RESISTOR 1/4W 4.7K	2	
R2770	ERDS2TJ224	C.RESISTOR 1/4W 220K	1	
R2771	ERDS2TJ153	C.RESISTOR 1/4W 15K	1	
R2773	ERDS2TJ563	C.RESISTOR 1/4W 56K	1	
R2774,75	ERDS2TJ103	C.RESISTOR 1/4W 10K	2	
R2776	ERDS2TJ104	C.RESISTOR 1/4W 100K	1	
R2777	ERDS2TJ102	C.RESISTOR 1/4W 1K	1	
R2778,79	ERDS2TJ103	C.RESISTOR 1/4W 10K	2	
R2780	ERDS2TJ333	C.RESISTOR 1/4W 33K	1	
R2785	ERDS2TJ683	C.RESISTOR 1/4W 68K	1	
R2786	ERDS2TJ563	C.RESISTOR 1/4W 56K	1	
R2787	ERDS2TJ683	C.RESISTOR 1/4W 68K	1	
R2788	ERDS2TJ473	C.RESISTOR 1/4W 47K	1	

Ref.No.		Part No.	Part Name & Description	Pcs	Remarks
R2789		ERDS2TJ103	C.RESISTOR 1/4W 10K	1	
R2790		ERDS2TJ563	C.RESISTOR 1/4W 56K	1	
R2791-93		ERDS2TJ223	C.RESISTOR 1/4W 22K	3	
R2794		ERDS2TJ393	C.RESISTOR 1/4W 39K	1	
R2795		ERDS2TJ103	C.RESISTOR 1/4W 10K	1	
R2798,99		ERDS2TJ333	C.RESISTOR 1/4W 33K	2	
R2800,01		ERDS2TJ223	C.RESISTOR 1/4W 22K	2	
R2802		ERDS2TJ103	C.RESISTOR 1/4W 10K	1	
R2804-06		ERDS2TJ104	C.RESISTOR 1/4W 100K	3	
R2807,08		ERDS2TJ102	C.RESISTOR 1/4W 1K	2	
R2809		ERDS2TJ123	C.RESISTOR 1/4W 12K	1	
R2810,11		ERDS2TJ103	C.RESISTOR 1/4W 10K	2	
R2813		ERDS2TJ561	C.RESISTOR 1/4W 560	1	
R2814		ERDS2TJ562	C.RESISTOR 1/4W 5.6K	1	
R2815		ERDS2TJ104	C.RESISTOR 1/4W 100K	1	
R2816		ERX1ANJ1R2	M.RESISTOR 1W 1.2	1	
R2817,18		ERDS2TJ103	C.RESISTOR 1/4W 10K	2	
R2820		ERDS2TJ561	C.RESISTOR 1/4W 560	1	
R2821		ERDS2TJ562	C.RESISTOR 1/4W 5.6K	1	
R2822		ERDS2TJ104	C.RESISTOR 1/4W 100K	1	
R2823		ERX1ANJ1R2	M.RESISTOR 1W 1.2	1	
R2824		ERDS2TJ103	C.RESISTOR 1/4W 10K	1	
R2827		ERDS2TJ103	C.RESISTOR 1/4W 10K	1	
R2828		ERDS2TJ104	C.RESISTOR 1/4W 100K	1	
R2830		ERDS2TJ153	C.RESISTOR 1/4W 15K	1	
R2831		ERDS2TJ183	C.RESISTOR 1/4W 18K	1	
R2832		EROS2CKG1102	M.RESISTOR 1/4W 11K	1	
R2834		ERDS2TJ333	C.RESISTOR 1/4W 33K	1	
R2835		ERDS2TJ183	C.RESISTOR 1/4W 18K	1	
R2836		ERDS2TJ563	C.RESISTOR 1/4W 56K	1	
R2837		ERDS2TJ823	C.RESISTOR 1/4W 82K	1	
R2838		ERDS2TJ273	C.RESISTOR 1/4W 27K	1	
R2842		ERDS2TJ102	C.RESISTOR 1/4W 1K	1	
R2843		ERDS2TJ153	C.RESISTOR 1/4W 15K	1	
R2845		ERDS2TJ103	C.RESISTOR 1/4W 10K	1	
R2846		ERDS2TJ393	C.RESISTOR 1/4W 39K	1	
R2850		ERDS2TJ102	C.RESISTOR 1/4W 1K	1	
R2853-55		ERDS2TJ103	C.RESISTOR 1/4W 10K	3	
R2856		ERDS2TJ105	C.RESISTOR 1/4W 1000K	1	
R2857,58		ERDS2TJ223	C.RESISTOR 1/4W 22K	2	
R2859,60		ERDS2TJ183	C.RESISTOR 1/4W 18K	2	
R2861		ERDS2TJ472	C.RESISTOR 1/4W 4.7K	1	
R2869		ERDS2TJ183	C.RESISTOR 1/4W 18K	1	
R2870,71		ERDS2TJ103	C.RESISTOR 1/4W 10K	2	
R2875		ERDS2TJ104	C.RESISTOR 1/4W 100K	1	
R2877-85		ERDS2TJ103	C.RESISTOR 1/4W 10K	9	
R2890		ERX1ANJR33	M.RESISTOR 1W 0.33	1	
R2891,92		ERDS2TJ104	C.RESISTOR 1/4W 100K	2	
R2893		ERDS2TJ102	C.RESISTOR 1/4W 1K	1	
R2894		ERDS2TJ332	C.RESISTOR 1/4W 3.3K	1	
R2895,96		ERDS2TJ105	C.RESISTOR 1/4W 1000K	2	
R2897,98		ERDS2TJ274	C.RESISTOR 1/4W 270K	2	
X2701		VSX0128	CRYSTAL OSCILLATOR	1	<R>
	■	VEP03662A	VIDEO C.B.A.		INCLUDING THE
					VIDEO SUB C.B.A.
					(VEP00N06A)
C30026		ECKF1H103ZF	C.CAPACITOR 50V 0.01U	1	
C30027		ECEA0JK331	E.CAPACITOR 6.3V 330U	1	
C30056		ECEA1CK101	E.CAPACITOR 16V 100U	1	
C30057		ECKF1H103ZF	C.CAPACITOR 50V 0.01U	1	
C30094		ECQB1H153JZ	P.CAPACITOR 50V 0.015U	1	
C30203		ECKF1H103ZF	C.CAPACITOR 50V 0.01U	1	
C30204		ECEA1CK470U	E.CAPACITOR 16V 47U	1	
C30206		ECCF1H560JC	C.CAPACITOR 50V 56P	1	

Ref.No.		Part No.	Part Name & Description	Pcs	Remarks
C30207		ECQP1H821GZ	P.CAPACITOR 50V 820P	1	
C30208		ECEA0JK101U	E.CAPACITOR 6.3V 100U	1	
C30209,10		ECKF1H103ZF	C.CAPACITOR 50V 0.01U	2	
C30211		ECEA1CK100	E.CAPACITOR 16V 10U	1	
C30212,13		ECKF1H103ZF	C.CAPACITOR 50V 0.01U	2	
C30216		ECKF1H103ZF	C.CAPACITOR 50V 0.01U	1	
C30218		ECEA1CN470S	E.CAPACITOR 16V 47U	1	
C30219		ECEA1CK470U	E.CAPACITOR 16V 47U	1	
C30220		ECKF1H103ZF	C.CAPACITOR 50V 0.01U	1	
C30221,22		ECCF1H220JC	C.CAPACITOR 50V 22P	2	
C30223		ECEA1EKN4R7	E.CAPACITOR 25V 4.7U	1	
C30224		ECKF1H103ZF	C.CAPACITOR 50V 0.01U	1	
C30225		ECEA0JK470	E.CAPACITOR 6.3V 47U	1	
C30226-28		ECEA1HK010	E.CAPACITOR 50V 1U	3	
C30229		ECEA1EKN4R7	E.CAPACITOR 25V 4.7U	1	
C30230		ECEA0JK470	E.CAPACITOR 6.3V 47U	1	
C30231,32		ECEA1HK010	E.CAPACITOR 50V 1U	2	
C30236		ECCF1H220JC	C.CAPACITOR 50V 22P	1	
C30237		ECEA1HKN010	E.CAPACITOR 50V 1U	1	
C30238		ECEA1HK2R2	E.CAPACITOR 50V 2.2U	1	
C30239		ECEA1CK100	E.CAPACITOR 16V 10U	1	
C30240		ECKF1H103ZF	C.CAPACITOR 50V 0.01U	1	
C30241		ECEA0JK101U	E.CAPACITOR 6.3V 100U	1	
C30242		ECCF1H390JC	C.CAPACITOR 50V 39P	1	
C30243		ECCF1H560JC	C.CAPACITOR 50V 56P	1	
C30244		ECEA1CK100	E.CAPACITOR 16V 10U	1	
C30245,46		ECCF1H270JC	C.CAPACITOR 50V 27P	2	
C30247		ECEA1CK100	E.CAPACITOR 16V 10U	1	
C30248		ECEA0JK331	E.CAPACITOR 6.3V 330U	1	
C30249,50		ECKF1H103ZF	C.CAPACITOR 50V 0.01U	2	
C30251		ECEA1CK470U	E.CAPACITOR 16V 47U	1	
C30252		ECEA1HK010	E.CAPACITOR 50V 1U	1	
C30253		ECEA1CK220	E.CAPACITOR 16V 22U	1	
C30254		ECQV1H104JZ	P.CAPACITOR 50V 0.1U	1	
C30255		ECQB1H562JH	P.CAPACITOR 50V 5600P	1	
C30256,57		ECEA0JK470	E.CAPACITOR 6.3V 47U	2	
C30258		ECEA1CK100	E.CAPACITOR 16V 10U	1	
C30259		ECEA0JK470	E.CAPACITOR 6.3V 47U	1	
C30260		ECCF1H470JC	C.CAPACITOR 50V 47P	1	
C30261		ECEA1CK100	E.CAPACITOR 16V 10U	1	
C30262		ECQV1H474JZ	P.CAPACITOR 50V 0.47U	1	
C30263		ECCF1H220JC	C.CAPACITOR 50V 22P	1	
C30264		ECQV1H104JZ	P.CAPACITOR 50V 0.1U	1	
C30265		ECEA0JK470	E.CAPACITOR 6.3V 47U	1	
C30266,67		ECEA1CK100	E.CAPACITOR 16V 10U	2	
C30268,69		ECKF1H103ZF	C.CAPACITOR 50V 0.01U	2	
C30270		ECQV1H334JZ	P.CAPACITOR 50V 0.33U	1	
C30271		ECEA1HK4R7	E.CAPACITOR 50V 4.7U	1	
C30272		ECQV1H473JZ	P.CAPACITOR 50V 0.047U	1	
C30273		ECEA0JK470	E.CAPACITOR 6.3V 47U	1	
C30274		ECEA1EK4R7	E.CAPACITOR 25V 4.7U	1	
C30275,76		ECEA1CK100	E.CAPACITOR 16V 10U	2	
C30277		ECCF1H330JC	C.CAPACITOR 50V 33P	1	
C30278		ECKF1H103ZF	C.CAPACITOR 50V 0.01U	1	
C30279		ECCF1H680JC	C.CAPACITOR 50V 68P	1	
C30280		ECEA1CK100	E.CAPACITOR 16V 10U	1	
C30281		ECCF1H220JC	C.CAPACITOR 50V 22P	1	
C30282		ECQV1H104JZ	P.CAPACITOR 50V 0.1U	1	
C30283		ECEA1CK100	E.CAPACITOR 16V 10U	1	
C30284		ECKF1H103ZF	C.CAPACITOR 50V 0.01U	1	
C30285		ECCF1H680JC	C.CAPACITOR 50V 68P	1	
C30286		ECKF1H103ZF	C.CAPACITOR 50V 0.01U	1	
C30287		ECCF1H560JC	C.CAPACITOR 50V 56P	1	
C30288-90		ECKF1H103ZF	C.CAPACITOR 50V 0.01U	3	
C30291		ECCF1H180JC	C.CAPACITOR 50V 18P	1	
C30292		ECCF1H330JC	C.CAPACITOR 50V 33P	1	
C30293-95		ECKF1H103ZF	C.CAPACITOR 50V 0.01U	3	
C30296		ECQP1H471JZ	P.CAPACITOR 50V 470P	1	
C30297		ECEA0JK101U	E.CAPACITOR 6.3V 100U	1	
C30298		ECKF1H103ZF	C.CAPACITOR 50V 0.01U	1	
C30299		ECEA1AK101	E.CAPACITOR 10V 100U	1	
C30300		ECEA0JK101U	E.CAPACITOR 6.3V 100U	1	
C30301,02		ECEA1ASS102	E.CAPACITOR 10V 1000U	2	
C30303		ECEA1CK101	E.CAPACITOR 16V 100U	1	
C30304		ECQV1H104JZ	P.CAPACITOR 50V 0.1U	1	

Ref.No.	Part No.	Part Name & Description	Pcs	Remarks
C30305	ECEA1AK101	E.CAPACITOR 10V 100U	1	
C30306	ECEA0JK101U	E.CAPACITOR 6.3V 100U	1	
C30307,08	ECEA1ASS102	E.CAPACITOR 10V 1000U	2	
C30309	ECEA1CK101	E.CAPACITOR 16V 100U	1	
C30310	ECQV1H104JZ	P.CAPACITOR 50V 0.1U	1	
C30311	ECKF1H103ZF	C.CAPACITOR 50V 0.01U	1	
C30312	ECEA1HKN010	E.CAPACITOR 50V 1U	1	
C30313	ECEA1CK101	E.CAPACITOR 16V 100U	1	
C30314	ECQV1H104JZ	P.CAPACITOR 50V 0.1U	1	
C30315	ECEA1AK470U	E.CAPACITOR 10V 47U	1	
C30316	ECEA1AU471	E.CAPACITOR 10V 470U	1	
C30317	ECEA1CK101	E.CAPACITOR 16V 100U	1	
C30318	ECQV1H104JZ	P.CAPACITOR 50V 0.1U	1	
C30319	ECEA1AK470U	E.CAPACITOR 10V 47U	1	
C30320	ECEA1CK101	E.CAPACITOR 16V 100U	1	
C30321	ECQV1H104JZ	P.CAPACITOR 50V 0.1U	1	
C30323,24	ECEA1CN101S	E.CAPACITOR 16V 100U	2	
C30325	ECKF1H103ZF	C.CAPACITOR 50V 0.01U	1	
C30326	ECEA1CK470U	E.CAPACITOR 16V 47U	1	
C30327	ECQV1H473JZ	P.CAPACITOR 50V 0.047U	1	
C30337	ECQB1H472JH	P.CAPACITOR 50V 4700P	1	
C30338	ECKF1H103ZF	C.CAPACITOR 50V 0.01U	1	
C30340	ECCF1H151JC	C.CAPACITOR 50V 150P	1	
C30341	ECEA1CK470U	E.CAPACITOR 16V 47U	1	
C30342-48	ECKF1H103ZF	C.CAPACITOR 50V 0.01U	7	
C30349	ECCF1H390JC	C.CAPACITOR 50V 39P	1	
C30350,51	ECKF1H103ZF	C.CAPACITOR 50V 0.01U	2	
C30352	ECEA1CK470U	E.CAPACITOR 16V 47U	1	
C30353	ECEA0JK101U	E.CAPACITOR 6.3V 100U	1	
C30354	ECEA1HKN2R2	E.CAPACITOR 50V 2.2U	1	
C30355	ECKF1H103ZF	C.CAPACITOR 50V 0.01U	1	
C30356	ECEA0JKN470	E.CAPACITOR 6.3V 47U	1	
C30362	ECEA0JK470	E.CAPACITOR 6.3V 47U	1	
C30364	ECEA1CK470U	E.CAPACITOR 16V 47U	1	
C30365	ECEA1HK010	E.CAPACITOR 50V 1U	1	
C30366	ECEA0JU471	E.CAPACITOR 6.3V 470U	1	
C30367	ECKF1H103ZF	C.CAPACITOR 50V 0.01U	1	
C30368	ECEA1HKR47	E.CAPACITOR 50V 0.47U	1	
C30369	ECKF1H103ZF	C.CAPACITOR 50V 0.01U	1	
C30370	ECEA1HK010	E.CAPACITOR 50V 1U	1	
C30371	ECEA1EK4R7	E.CAPACITOR 25V 4.7U	1	
C30372	ECEA1CK100	E.CAPACITOR 16V 10U	1	
C30373	ECEA1HK3R3	E.CAPACITOR 50V 3.3U	1	
C30374	ECKF1H103ZF	C.CAPACITOR 50V 0.01U	1	
C30375	ECEA1HK010	E.CAPACITOR 50V 1U	1	
C30376	ECCF1H680JC	C.CAPACITOR 50V 68P	1	
C30377	ECEA1CK100	E.CAPACITOR 16V 10U	1	
C30378	ECCF1H220JC	C.CAPACITOR 50V 22P	1	
C30379	ECKF1H103ZF	C.CAPACITOR 50V 0.01U	1	
C30382-85	ECKF1H103ZF	C.CAPACITOR 50V 0.01U	4	
C30386	ECEA1CK470U	E.CAPACITOR 16V 47U	1	
C30387	ECKF1H103ZF	C.CAPACITOR 50V 0.01U	1	
C30388	VCCF1H271GC	C.CAPACITOR 50V 270P	1	
C30389	VCCF1H820GC	C.CAPACITOR 50V 82P	1	
C30390	VCCF1H271GC	C.CAPACITOR 50V 270P	1	
C30391	ECEA0JSS102	E.CAPACITOR 6.3V 1000U	1	
C30392	ECKF1H103ZF	C.CAPACITOR 50V 0.01U	1	
C30393	ECEA1EKN4R7	E.CAPACITOR 25V 4.7U	1	
C30394,95	ECEA1EK4R7	E.CAPACITOR 25V 4.7U	2	
C30396	ECEA1CK100	E.CAPACITOR 16V 10U	1	
C30397	ECEA0JK220	E.CAPACITOR 6.3V 22U	1	
C30398	ECEA0JK470	E.CAPACITOR 6.3V 47U	1	
C30399	ECCF1H470JC	C.CAPACITOR 50V 47P	1	
C30400-03	ECKF1H103ZF	C.CAPACITOR 50V 0.01U	4	
C30404	ECQV1H104JZ	P.CAPACITOR 50V 0.1U	1	
C30405	ECEA0JK470	E.CAPACITOR 6.3V 47U	1	
C30408	ECCF1H221JC	C.CAPACITOR 50V 220P	1	
C30409	ECEA0JK101U	E.CAPACITOR 6.3V 100U	1	
C30410	ECCF1H101JC	C.CAPACITOR 50V 100P	1	
C30411	ECKF1H103ZF	C.CAPACITOR 50V 0.01U	1	
C30412	ECQB1H123JH	P.CAPACITOR 50V 0.012U	1	
C30414	VCKD1H431JA	C.CAPACITOR 50V 430P	1	
C30415	ECQV1H104JZ	P.CAPACITOR 50V 0.1U	1	
C30416	ECEA1CK470U	E.CAPACITOR 16V 47U	1	
C30417,18	ECEA0JK330	E.CAPACITOR 6.3V 33U	2	

Ref.No.	Part No.	Part Name & Description	Pcs	Remarks
C30419	ECEA1CK470U	E.CAPACITOR 16V 47U	1	
C30420	ECCF1H390JC	C.CAPACITOR 50V 39P	1	
C30422,23	ECEA1CK470U	E.CAPACITOR 16V 47U	2	
C30425	ECKF1H181KB	C.CAPACITOR 50V 1800P	1	
C30428	ECKF1H103ZF	C.CAPACITOR 50V 0.01U	1	
C30429	ECEA1CK101	E.CAPACITOR 16V 100U	1	
C30430	ECEA1AK101	E.CAPACITOR 10V 100U	1	
C30431	ECEA0JK331	E.CAPACITOR 6.3V 330U	1	
C30433	ECCF1H220JC	C.CAPACITOR 50V 22P	1	
C30434	ECCF1H100DC	C.CAPACITOR 50V 10P	1	
C30435	ECQV1H104JZ	P.CAPACITOR 50V 0.1U	1	
C30437	ECEA1CK220	E.CAPACITOR 16V 22U	1	
C30438	ECEA1ES4R7	E.CAPACITOR 25V 4.7U	1	
C30441	ECKF1H103ZF	C.CAPACITOR 50V 0.01U	1	
C30442	ECCF1H121JC	C.CAPACITOR 50V 120P	1	
C30443	ECCF1H101JC	C.CAPACITOR 50V 100P	1	
C30444	ECEA0JK220	E.CAPACITOR 6.3V 22U	1	
C30445	ECCF1H100DC	C.CAPACITOR 50V 10P	1	
C30447	ECCF1H680JC	C.CAPACITOR 50V 68P	1	
D30053,54	MA165	DIODE	2	<R>
D30055	MA4091	DIODE	1	<R>
D30056	MA165	DIODE	1	<R>
D30061	MA165	DIODE	1	<R>
D30062	1SS99	DIODE	1	<R>
D30063	OA95	DIODE	1	<R>
D30064,65	MA165	DIODE	2	<R>
DL30051	VLD0089	DELAY	1	<R>
DL30054	VLD0153	DELAY LINE	1	<R>
DL30055	VLD0125	DELAY LINE	1	<R>
FL30051	VLD0123	FILTER	1	
FL30052	VLF0639	FILTER	1	
FL30053	VLF0499	FILTER	1	
FL30054	ELB4M022	FILTER	1	
FL30055	VLF0063	FILTER	1	
FL30056	VLF0567	FILTER	1	
FL30057	VLF0523	FILTER	1	
FL30058	VLF0568	FILTER	1	
FL30059	ELXTS470GA	FILTER	1	
FL30060	ELB4R033	FILTER	1	
IC30052	AN3321K	IC	1	<R>
IC30053	VC2031DP	IC	1	<R>
IC30054	M51647SP	IC	1	<R>
IC30055	VEFH03D	HIC	1	<R>
IC30056,57	BA7001	IC	2	<R>
IC30058	MSM6965-3RS	IC	1	<R>
IC30059	AN3494NK	IC	1	<R>
IC30060	MN3106	IC	1	<R>
IC30061	MN3802A	IC	1	<R>
IC30062	AN3211K	IC	1	<R>
IC30063,64	BA7001	IC	2	<R>
IC30065	TA7348P	IC	1	<R>
L30005	VLQEL05F101K	COIL 100UH	1	
L30010	VLQEL05F101K	COIL 100UH	1	
L30016	VLQEL06F5R6J	COIL 56UH	1	
L30051-54	VLQEL05F101K	COIL 100UH	4	
L30055,56	VLQEL05F560K	COIL 56UH	2	
L30057	VLQEL05F101K	COIL 100UH	1	
L30058	VLQEL05F121J	COIL 120UH	1	
L30059	VLQEL05F151K	COIL 150UH	1	
L30060,61	VLQEL05F101K	COIL 100UH	2	

Ref.No.		Part No.	Part Name & Description	Pcs	Remarks
L30062		VLQEL05F220K	COIL 22UH	1	
L30063,64		VLQEL05F101K	COIL 100UH	2	
L30065,66		VLQEL05F150K	COIL 15UH	2	
L30067-75		VLQEL05F101K	COIL 100UH	9	
L30077		VLQEL05F101K	COIL 100UH	1	
L30078		VLQEL05F560K	COIL 56UH	1	
L30079		VLQEL05F101K	COIL 100UH	1	
L30082-84		VLQEL05F101K	COIL 100UH	3	
L30085		VLQEL05F180K	COIL 18UH	1	
L30086		VLQEL05F151K	COIL 150UH	1	
P30001		VJP1232T	CONNECTOR(MALE) 5P	1	
P30002		VJP1233T	CONNECTOR(MALE) 6P	1	
P30003		VJP1229T	CONNECTOR(MALE) 2P	1	
P30004		VJP1236T	CONNECTOR(MALE) 9P	1	
P30005		VJP1237T	CONNECTOR(MALE) 10P	1	
P30006,07		VJP1235T	CONNECTOR(MALE) 8P	2	
P30008		VJP1511T	CONNECTOR(MALE) 11P	1	
P30009		VJP1230T	CONNECTOR(MALE) 3P	1	
P30011,12		VJP1234T	CONNECTOR(MALE) 7P	2	
P30013		VJP1229T	CONNECTOR(MALE) 2P	1	
P30014		VJP1229	CONNECTOR(MALE) 2P	1	
P30015,16		VJP1231T	CONNECTOR(MALE) 4P	2	
P30017		VJP1229T	CONNECTOR(MALE) 2P	1	
Q30051,52		2SD636	TRANSISTOR	2	(Q,R,S)<R>
Q30053		2SB641	TRANSISTOR	1	(Q,R,S)<R>
Q30054		2SC2206	TRANSISTOR	1	(B,C)<R>
Q30055		2SB641	TRANSISTOR	1	(Q,R,S)<R>
Q30056		2SC2206	TRANSISTOR	1	(B,C)<R>
Q30057		2SB641	TRANSISTOR	1	(Q,R,S)<R>
Q30061,62		2SB641	TRANSISTOR	2	(Q,R,S)<R>
Q30063		2SD636	TRANSISTOR	1	(Q,R,S)<R>
Q30064,65		2SC2206	TRANSISTOR	2	(B,C)<R>
Q30066		2SD636	TRANSISTOR	1	(Q,R,S)<R>
Q30067		2SD639	TRANSISTOR	1	(Q,R,S)<R>
Q30068		2SB643	TRANSISTOR	1	(Q,R,S)<R>
Q30069		2SD639	TRANSISTOR	1	(Q,R,S)<R>
Q30070		2SB643	TRANSISTOR	1	(Q,R,S)<R>
Q30071-76		2SD636	TRANSISTOR	6	(Q,R,S)<R>
Q30077,78		2SB641	TRANSISTOR	2	(Q,R,S)<R>
Q30079		2SC2206	TRANSISTOR	1	(B,C)<R>
Q30081		2SB641	TRANSISTOR	1	(Q,R,S)<R>
Q30082		2SC2206	TRANSISTOR	1	(B,C)<R>
Q30086		2SC2206	TRANSISTOR	1	(B,C)<R>
Q30087,88		2SD636	TRANSISTOR	2	(Q,R,S)<R>
Q30089		2SC2206	TRANSISTOR	1	(B,C)<R>
Q30090,91		2SD636	TRANSISTOR	2	(Q,R,S)<R>
Q30092		2SB641	TRANSISTOR	1	(Q,R,S)<R>
Q30093		2SC2206	TRANSISTOR	1	(B,C)<R>
Q30094-96		2SD636	TRANSISTOR	3	(Q,R,S)<R>
Q30099		2SB641	TRANSISTOR	1	(Q,R,S)<R>
Q30100		2SA1254	TRANSISTOR	1	<R>
Q30101		2SC2206	TRANSISTOR	1	(B,C)<R>
Q30102		2SD636	TRANSISTOR	1	(Q,R,S)<R>
Q30103		2SB641	TRANSISTOR	1	(Q,R,S)<R>
QR30001		UN1213	TRANSISTOR-RESISTOR	1	<R>
QR30007		UN1212	TRANSISTOR-RESISTOR	1	<R>
QR30008		UN1213	TRANSISTOR-RESISTOR	1	<R>
QR30052		UN1213	TRANSISTOR-RESISTOR	1	<R>
QR30053		UN1112	TRANSISTOR-RESISTOR	1	<R>
QR30055-57		UN1213	TRANSISTOR-RESISTOR	3	<R>
QR30058		UN1112	TRANSISTOR-RESISTOR	1	<R>
QR30059		UN1213	TRANSISTOR-RESISTOR	1	<R>
QR30062,63		UN1213	TRANSISTOR-RESISTOR	2	<R>

Ref.No.		Part No.	Part Name & Description	Pcs	Remarks
R30050		ERDS2TJ124	C.RESISTOR 1/4W 120K	1	
R30051		ERDS2TJ103	C.RESISTOR 1/4W 10K	1	
R30079		EROS2CKG2200	M.RESISTOR 1/4W 220	1	
R30097		ERDS2TJ103	C.RESISTOR 1/4W 10K	1	
R30098		ERDS2TJ102	C.RESISTOR 1/4W 1K	1	
R30099		ERDS2TJ223	C.RESISTOR 1/4W 22K	1	
R30100		ERDS2TJ332	C.RESISTOR 1/4W 3.3K	1	
R30117		ERDS2TJ152	C.RESISTOR 1/4W 1.5K	1	
R30203,04		ERDS2TJ223	C.RESISTOR 1/4W 22K	2	
R30205		ERDS2TJ222	C.RESISTOR 1/4W 2.2K	1	
R30210		EROS2CKG1201	M.RESISTOR 1/4W 1.2K	1	
R30211		EROS2CKG2700	M.RESISTOR 1/4W 270	1	
R30212		EROS2CKG1201	M.RESISTOR 1/4W 1.2K	1	
R30213		ERDS2TJ153	C.RESISTOR 1/4W 15K	1	
R30214		ERDS2TJ561	C.RESISTOR 1/4W 560	1	
R30215		ERDS2TJ122	C.RESISTOR 1/4W 1.2K	1	
R30216		ERDS2TJ331	C.RESISTOR 1/4W 330	1	
R30217		ERDS2TJ122	C.RESISTOR 1/4W 1.2K	1	
R30218		ERDS2TJ182	C.RESISTOR 1/4W 1.8K	1	
R30219		ERDS2TJ152	C.RESISTOR 1/4W 1.5K	1	
R30220		ERDS2TJ122	C.RESISTOR 1/4W 1.2K	1	
R30221		ERDS2T0	C.RESISTOR 1/4W 0	1	
R30222		ERDS2TJ122	C.RESISTOR 1/4W 1.2K	1	
R30223		EROS2CKG3301	M.RESISTOR 1/4W 3.3K	1	
R30224		EROS2CKG4700	M.RESISTOR 1/4W 470	1	
R30225,26		EROS2CKG1001	M.RESISTOR 1/4W 1K	2	
R30227		ERDS2TJ823	C.RESISTOR 1/4W 82K	1	
R30228,29		ERDS2TJ103	C.RESISTOR 1/4W 10K	2	
R30231		ERDS2TJ122	C.RESISTOR 1/4W 1.2K	1	
R30232		ERDS2TJ561	C.RESISTOR 1/4W 560	1	
R30233-35		ERDS2TJ103	C.RESISTOR 1/4W 10K	3	
R30236		ERDS2TJ222	C.RESISTOR 1/4W 2.2K	1	
R30237		ERDS2TJ332	C.RESISTOR 1/4W 3.3K	1	
R30238		ERDS2TJ102	C.RESISTOR 1/4W 1K	1	
R30239,40		ERDS2TJ223	C.RESISTOR 1/4W 22K	2	
R30241,42		ERDS2TJ102	C.RESISTOR 1/4W 1K	2	
R30243		ERDS2TJ182	C.RESISTOR 1/4W 1.8K	1	
R30244,45		ERDS2TJ223	C.RESISTOR 1/4W 22K	2	
R30246		ERDS2TJ103	C.RESISTOR 1/4W 10K	1	
R30247		ERDS2TJ222	C.RESISTOR 1/4W 2.2K	1	
R30252		ERDS2TJ103	C.RESISTOR 1/4W 10K	1	
R30253		ERDS2TJ474	C.RESISTOR 1/4W 470K	1	
R30254,55		ERDS2TJ102	C.RESISTOR 1/4W 1K	2	
R30256,57		ERDS2TJ392	C.RESISTOR 1/4W 3.9K	2	
R30258		ERDS2TJ103	C.RESISTOR 1/4W 10K	1	
R30259		ERDS2TJ272	C.RESISTOR 1/4W 2.7K	1	
R30260		ERDS2TJ123	C.RESISTOR 1/4W 12K	1	
R30261		ERDS2TJ223	C.RESISTOR 1/4W 22K	1	
R30262		ERDS2TJ102	C.RESISTOR 1/4W 1K	1	
R30263		ERDS2TJ562	C.RESISTOR 1/4W 5.6K	1	
R30264		ERDS2TJ183	C.RESISTOR 1/4W 18K	1	
R30265-68		ERDS2TJ102	C.RESISTOR 1/4W 1K	4	
R30269		ERDS2TJ391	C.RESISTOR 1/4W 390	1	
R30270		ERDS2TJ151	C.RESISTOR 1/4W 150	1	
R30271		ERDS2TJ222	C.RESISTOR 1/4W 2.2K	1	
R30272		ERDS2TJ102	C.RESISTOR 1/4W 1K	1	
R30273		ERDS2TJ103	C.RESISTOR 1/4W 10K	1	
R30274		ERDS2TJ183	C.RESISTOR 1/4W 18K	1	
R30275		ERDS2TJ272	C.RESISTOR 1/4W 2.7K	1	
R30276		ERDS2TJ822	C.RESISTOR 1/4W 8.2K	1	
R30277,78		ERDS2TJ102	C.RESISTOR 1/4W 1K	2	
R30279		ERDS2TJ823	C.RESISTOR 1/4W 82K	1	
R30280		ERDS2TJ122	C.RESISTOR 1/4W 1.2K	1	
R30281		ERDS2TJ681	C.RESISTOR 1/4W 680	1	
R30282		ERDS2TJ152	C.RESISTOR 1/4W 1.5K	1	
R30283		ERDS2TJ331	C.RESISTOR 1/4W 330	1	
R30284		ERDS2TJ103	C.RESISTOR 1/4W 10K	1	
R30285		ERDS2TJ223	C.RESISTOR 1/4W 22K	1	
R30286		ERDS2TJ222	C.RESISTOR 1/4W 2.2K	1	
R30287		ERDS2TJ271	C.RESISTOR 1/4W 270	1	
R30288		ERDS2TJ122	C.RESISTOR 1/4W 1.2K	1	
R30289,90		ERDS2TJ103	C.RESISTOR 1/4W 10K	2	
R30291,92		ERDS2TJ471	C.RESISTOR 1/4W 470	2	
R30293		ERDS2TJ101	C.RESISTOR 1/4W 100	1	
R30294		ERDS2TJ472	C.RESISTOR 1/4W 4.7K	1	

Ref.No.		Part No.	Part Name & Description	Pcs	Remarks
R30295		ERDS2TJ562	C.RESISTOR 1/4W 5.6K	1	
R30296		ERDS2TJ103	C.RESISTOR 1/4W 10K	1	
R30297		ERDS2TJ101	C.RESISTOR 1/4W 100	1	
R30298		ERDS2TJ103	C.RESISTOR 1/4W 10K	1	
R30299		ERDS2TJ101	C.RESISTOR 1/4W 100	1	
R30300		ERDS2TJ103	C.RESISTOR 1/4W 10K	1	
R30301		ERDS2TJ472	C.RESISTOR 1/4W 4.7K	1	
R30302		ERDS2TJ562	C.RESISTOR 1/4W 5.6K	1	
R30303		ERDS2TJ103	C.RESISTOR 1/4W 10K	1	
R30304		ERDS2TJ101	C.RESISTOR 1/4W 100	1	
R30305		ERDS2TJ103	C.RESISTOR 1/4W 10K	1	
R30306		ERDS2TJ123	C.RESISTOR 1/4W 12K	1	
R30307		ERDS2TJ223	C.RESISTOR 1/4W 22K	1	
R30308		ERDS2TJ330	C.RESISTOR 1/4W 33	1	
R30309		ERDS2TJ471	C.RESISTOR 1/4W 470	1	
R30310		ERDS2TJ103	C.RESISTOR 1/4W 10K	1	
R30311		ERDS2TJ750	C.RESISTOR 1/4W 75	1	
R30312		ERDS2TJ123	C.RESISTOR 1/4W 12K	1	
R30313		ERDS2TJ223	C.RESISTOR 1/4W 22K	1	
R30314		ERDS2TJ222	C.RESISTOR 1/4W 2.2K	1	
R30315		ERDS2TJ330	C.RESISTOR 1/4W 33	1	
R30316		ERDS2TJ471	C.RESISTOR 1/4W 470	1	
R30317		ERDS2TJ103	C.RESISTOR 1/4W 10K	1	
R30318		ERDS2TJ750	C.RESISTOR 1/4W 75	1	
R30319		ERDS2TJ153	C.RESISTOR 1/4W 15K	1	
R30320		ERDS2TJ223	C.RESISTOR 1/4W 22K	1	
R30321		ERDS2TJ222	C.RESISTOR 1/4W 2.2K	1	
R30322,23		ERDS2TJ330	C.RESISTOR 1/4W 33	2	
R30324		ERDS2TJ471	C.RESISTOR 1/4W 470	1	
R30325		ERDS2TJ330	C.RESISTOR 1/4W 33	1	
R30326-31		ERDS2TJ102	C.RESISTOR 1/4W 1K	6	
R30332		ERDS2TJ472	C.RESISTOR 1/4W 4.7K	1	
R30333		ERDS2TJ471	C.RESISTOR 1/4W 470	1	
R30334		ERDS2TJ222	C.RESISTOR 1/4W 2.2K	1	
R30335		ERDS2TJ102	C.RESISTOR 1/4W 1K	1	
R30336,37		ERDS2TJ103	C.RESISTOR 1/4W 10K	2	
R30338-40		ERDS2TJ102	C.RESISTOR 1/4W 1K	3	
R30341		ERDS2TJ562	C.RESISTOR 1/4W 5.6K	1	
R30342		ERDS2TJ182	C.RESISTOR 1/4W 1.8K	1	
R30343,44		ERDS2TJ102	C.RESISTOR 1/4W 1K	2	
R30345		ERDS2TJ391	C.RESISTOR 1/4W 390	1	
R30346,47		ERDS2TJ223	C.RESISTOR 1/4W 22K	2	
R30348,49		ERDS2TJ103	C.RESISTOR 1/4W 10K	2	
R30350		ERDS2TJ102	C.RESISTOR 1/4W 1K	1	
R30351		ERDS2TJ681	C.RESISTOR 1/4W 680	1	
R30352		ERDS2TJ152	C.RESISTOR 1/4W 1.5K	1	
R30353		ERDS2TJ102	C.RESISTOR 1/4W 1K	1	
R30356		ERDS2TJ222	C.RESISTOR 1/4W 2.2K	1	
R30357		ERDS2TJ223	C.RESISTOR 1/4W 22K	1	
R30358,59		ERDS2TJ273	C.RESISTOR 1/4W 27K	2	
R30360		ERDS2TJ822	C.RESISTOR 1/4W 8.2K	1	
R30361		ERDS2TJ562	C.RESISTOR 1/4W 5.6K	1	
R30362		ERDS2TJ153	C.RESISTOR 1/4W 15K	1	
R30363		ERDS2TJ561	C.RESISTOR 1/4W 560	1	
R30364		ERDS2TJ102	C.RESISTOR 1/4W 1K	1	
R30373		EROS2CKG5601	M.RESISTOR 1/4W 5.6K	1	
R30374		EROS2CKG1502	M.RESISTOR 1/4W 15K	1	
R30375		ERDS2TJ561	C.RESISTOR 1/4W 560	1	
R30377		ERDS2TJ102	C.RESISTOR 1/4W 1K	1	
R30378		ERDS2TJ330	C.RESISTOR 1/4W 33	1	
R30379,80		ERDS2TJ473	C.RESISTOR 1/4W 47K	2	
R30381		ERDS2TJ222	C.RESISTOR 1/4W 2.2K	1	
R30382,83		ERDS2TJ102	C.RESISTOR 1/4W 1K	2	
R30388		ERDS2TJ103	C.RESISTOR 1/4W 10K	1	
R30389		ERDS2TJ472	C.RESISTOR 1/4W 4.7K	1	
R30390		ERDS2TJ153	C.RESISTOR 1/4W 15K	1	
R30391		ERDS2TJ102	C.RESISTOR 1/4W 1K	1	
R30392		ERDS2TJ471	C.RESISTOR 1/4W 470	1	
R30393,94		ERDS2TJ102	C.RESISTOR 1/4W 1K	2	
R30395		ERDS2TJ561	C.RESISTOR 1/4W 560	1	
R30399		ERDS2TJ333	C.RESISTOR 1/4W 33K	1	
R30400		ERDS2TJ183	C.RESISTOR 1/4W 18K	1	
R30401		ERDS2TJ102	C.RESISTOR 1/4W 1K	1	
R30402		ERDS2TJ471	C.RESISTOR 1/4W 470	1	
R30403		ERDS2TJ331	C.RESISTOR 1/4W 330	1	

Ref.No.		Part No.	Part Name & Description	Pcs	Remarks
R30405		ERDS2TJ102	C.RESISTOR 1/4W 1K	1	
R30413		ERDS2TJ103	C.RESISTOR 1/4W 10K	1	
R30414		ERDS2TJ222	C.RESISTOR 1/4W 2.2K	1	
R30415		ERDS2TJ681	C.RESISTOR 1/4W 680	1	
R30416		ERDS2TJ105	C.RESISTOR 1/4W 1000K	1	
R30418		ERDS2TJ102	C.RESISTOR 1/4W 1K	1	
R30419		ERDS2TJ222	C.RESISTOR 1/4W 2.2K	1	
R30423,24		ERDS2TJ222	C.RESISTOR 1/4W 2.2K	2	
R30425		ERDS2TJ103	C.RESISTOR 1/4W 10K	1	
R30427		ERDS2TJ101	C.RESISTOR 1/4W 100	1	
R30428		ERDS2TJ222	C.RESISTOR 1/4W 2.2K	1	
R30429		ERDS2TJ101	C.RESISTOR 1/4W 100	1	
R30430		ERDS2TJ102	C.RESISTOR 1/4W 1K	1	
R30431		ERDS2TJ123	C.RESISTOR 1/4W 12K	1	
R30432		ERDS2TJ101	C.RESISTOR 1/4W 100	1	
R30433		ERDS2TJ562	C.RESISTOR 1/4W 5.6K	1	
R30436		ERDS2TJ153	C.RESISTOR 1/4W 15K	1	
R30437		ERDS2TJ562	C.RESISTOR 1/4W 5.6K	1	
R30438		ERDS2TJ222	C.RESISTOR 1/4W 2.2K	1	
R30439		ERDS2TJ102	C.RESISTOR 1/4W 1K	1	
R30440		ERDS2TJ821	C.RESISTOR 1/4W 820	1	
R30442		ERDS2TJ681	C.RESISTOR 1/4W 680	1	
R30443		ERDS2TJ102	C.RESISTOR 1/4W 1K	1	
R30444		ERDS2TJ222	C.RESISTOR 1/4W 2.2K	1	
R30445		ERDS2TJ331	C.RESISTOR 1/4W 330	1	
R30449		ERDS2TJ103	C.RESISTOR 1/4W 10K	1	
R30450		ERDS2TJ563	C.RESISTOR 1/4W 56K	1	
R30451		ERDS2TJ152	C.RESISTOR 1/4W 1.5K	1	
R30452		ERDS2TJ222	C.RESISTOR 1/4W 2.2K	1	
R30455		ERDS2TJ332	C.RESISTOR 1/4W 3.3K	1	
R30456		ERDS2TJ682	C.RESISTOR 1/4W 6.8K	1	
R30457		ERDS2TJ223	C.RESISTOR 1/4W 22K	1	
R30458		ERDS2TJ222	C.RESISTOR 1/4W 2.2K	1	
R30459		ERDS2TJ102	C.RESISTOR 1/4W 1K	1	
TH30002		ERTD2FHL202S	THERMISTOR 2KS	1	
VR30051		EVM38GA00B23	V.RESISTOR 2K	1	
VR30052		EVM38GA00B14	V.RESISTOR 10K	1	
VR30053		EVM38GA00B23	V.RESISTOR 2K	1	
VR30055		EVM38GA00B23	V.RESISTOR 2K	1	
VR30056		EVIK8CA00B14	V.RESISTOR 10K	1	
VR30057,58		EVM38GA00B14	V.RESISTOR 10K	2	
VR30059		EVM38GA00B52	V.RESISTOR 500	1	
VR30060		EVM38GA00B13	V.RESISTOR 1K	1	
VR30061-63		EVM38GA00B23	V.RESISTOR 2K	3	
VR30064		EVM38GA00B24	V.RESISTOR 20K	1	
VR30067		EVM38GA00B13	V.RESISTOR 1K	1	
VR30068		EVM38GA00B23	V.RESISTOR 2K	1	
X30001		VSX0225	CRYSTAL OSCILLATOR	1	<R>
			MISCELLANEOUS		
E52		VSC2635	SHIELD CASE (LOWER)	1	
E51		VSC2636	SHIELD CASE (MIDDLE)	1	
E50		VSC2637	SHIELD CASE (UPPER)	1	
E53		VMX0985	P.C.B. SPACER	1	
	■	VEP03558B	SUB VIDEO C.B.A.		
C31001		ECEA1CK101	E.CAPACITOR 16V 100U	1	

Ref.No.		Part No.	Part Name & Description	Pcs	Remarks
C31002-04		ECKF1H103ZF	C.CAPACITOR 50V 0.01U	3	
C31005		ECCF1H220JC	C.CAPACITOR 50V 22P	1	
C31006		ECCF1H150JC	C.CAPACITOR 50V 15P	1	
C31009		ECCF1H120JC	C.CAPACITOR 50V 12P	1	
C31010		ECCF1H820JC	C.CAPACITOR 50V 82P	1	
C31011		ECKF1H103ZF	C.CAPACITOR 50V 0.01U	1	
C31012		ECEA0JK101U	E.CAPACITOR 6.3V 100U	1	
C31013,14		ECKF1H103ZF	C.CAPACITOR 50V 0.01U	2	
C31015		ECCF1H820JC	C.CAPACITOR 50V 82P	1	
C31016		ECCF1H181JC	C.CAPACITOR 50V 180P	1	
C31017-23		ECKF1H103ZF	C.CAPACITOR 50V 0.01U	7	
C31024		ECQV1H104JZ	P.CAPACITOR 50V 0.1U	1	
C31025		ECKF1H103ZF	C.CAPACITOR 50V 0.01U	1	
C31026		ECEA0JK101U	E.CAPACITOR 6.3V 100U	1	
C31028,29		ECKF1H103ZF	C.CAPACITOR 50V 0.01U	2	
C31030		ECQB1H103JH	P.CAPACITOR 50V 0.01U	1	
C31031,32		ECEA1CK100	E.CAPACITOR 16V 10U	2	
C31033		ECKF1H103ZF	C.CAPACITOR 50V 0.01U	1	
C31034		ECEA1CK101	E.CAPACITOR 16V 100U	1	
C31038		ECCF1H820JC	C.CAPACITOR 50V 82P	1	
C31039		ECKF1H103ZF	C.CAPACITOR 50V 0.01U	1	
C31040		ECCF1H390JC	C.CAPACITOR 50V 39P	1	
C31041		ECCF1H100DC	C.CAPACITOR 50V 10P	1	
C31042		ECCF1H470JC	C.CAPACITOR 50V 47P	1	
C31043		ECKF1H103ZF	C.CAPACITOR 50V 0.01U	1	
C31044		ECCF1H270JC	C.CAPACITOR 50V 27P	1	
C31045		ECEA0JK101U	E.CAPACITOR 6.3V 100U	1	
C31046		ECKF1H103ZF	C.CAPACITOR 50V 0.01U	1	
C31047		ECCF1H100DC	C.CAPACITOR 50V 10P	1	
C31048		ECCF1H120JC	C.CAPACITOR 50V 12P	1	
C31049		ECEA1CK101	E.CAPACITOR 16V 100U	1	
C31050		ECKF1H103ZF	C.CAPACITOR 50V 0.01U	1	
C31051,52		ECQV1H104JZ	P.CAPACITOR 50V 0.1U	2	
C31053		ECEA1CK330U	E.CAPACITOR 16V 33U	1	
C31054		ECCF1H220JC	C.CAPACITOR 50V 22P	1	
C31055,56		ECCF1H151JC	C.CAPACITOR 50V 150P	2	
C31057		ECQV1H104JZ	P.CAPACITOR 50V 0.1U	1	
C31058,59		ECKF1H103ZF	C.CAPACITOR 50V 0.01U	2	
C31060		ECEA1CK100	E.CAPACITOR 16V 10U	1	
DL31001		ELB4Q053	FILTER	1	<R>
DL31002		ELB4R031	FILTER	1	<R>
IC31001		M52054SP	IC	1	<R>
IC31002		MN4053B	IC	1	<R>
IC31003		VCR0188	IC	1	<R>
L31001		VLQEL05F101K	COIL 100UH	1	
L31002		VLQEL05F121K	COIL 120UH	1	
L31003		VLQEL05F120K	COIL 12UH	1	
L31004		VLQEL05F101K	COIL 100UH	1	
L31005		VLQEL05F150K	COIL 15UH	1	
L31006		VLQEL05F391J	COIL 390UH	1	
L31007		VLQEL05F121K	COIL 120UH	1	
L31008		VLQEL05F101K	COIL 100UH	1	
L31009		VLQEL05F100K	COIL 10UH	1	
L31010,11		VLQEL05F180K	COIL 18UH	2	
L31012		VLQEL05F121K	COIL 120UH	1	
L31013		VLQEL05F101K	COIL 100UH	1	
L31014		VLQEL05F560K	COIL 56UH	1	
L31015		VLQEL05F470K	COIL 47UH	1	
L31016		VLQEL05F100K	COIL 10UH	1	
L31017		VLQEL05F6R8K	COIL 6.8UH	1	
L31018		VLQEL05F151J	COIL 150UH	1	
L31019		VLQEL05F100K	COIL 10UH	1	
P31001		VJP1235T	CONNECTOR(MALE) 8P	1	

Ref.No.		Part No.	Part Name & Description	Pcs	Remarks
P31002		VJP1235R	CONNECTOR(MALE) 8P	1	
P31003		VJP1236T	CONNECTOR(MALE) 9P	1	
P31004,05		VJP1229T	CONNECTOR(MALE) 2P	2	
P31006		VJP1229	CONNECTOR(MALE) 2P	1	
Q31001		2SD636	TRANSISTOR	1	(Q,R,S)<R>
Q31002		2SC2206	TRANSISTOR	1	(B,C)<R>
Q31003-06		2SD636	TRANSISTOR	4	(Q,R,S)<R>
Q31007		2SC2206	TRANSISTOR	1	(B,C)<R>
Q31008		2SD636	TRANSISTOR	1	(Q,R,S)<R>
Q31009		2SC2206	TRANSISTOR	1	(B,C)<R>
Q31010		2SD639	TRANSISTOR	1	(Q,R,S)<R>
Q31011		2SD636	TRANSISTOR	1	(Q,R,S)<R>
Q31013,14		2SD636	TRANSISTOR	2	(Q,R,S)<R>
Q31015,16		2SC2206	TRANSISTOR	2	(B,C)<R>
Q31018,19		2SC2206	TRANSISTOR	2	(B,C)<R>
Q31020		2SD636	TRANSISTOR	1	(Q,R,S)<R>
QR31001-03		UN1212	TRANSISTOR-RESISTOR	3	<R>
QR31004		UN1213	TRANSISTOR-RESISTOR	1	<R>
QR31006		UN1111	TRANSISTOR-RESISTOR	1	<R>
QR31008-10		UN1213	TRANSISTOR-RESISTOR	3	<R>
R31001		ERDS2TJ222	C.RESISTOR 1/4W 2.2K	1	
R31002		ERDS2TJ102	C.RESISTOR 1/4W 1K	1	
R31003		ERDS2TJ471	C.RESISTOR 1/4W 470	1	
R31004		ERDS2TJ223	C.RESISTOR 1/4W 22K	1	
R31005		ERDS2TJ103	C.RESISTOR 1/4W 10K	1	
R31006-09		ERDS2TJ333	C.RESISTOR 1/4W 33K	4	
R31010		ERDS2TJ471	C.RESISTOR 1/4W 470	1	
R31011,12		ERDS2TJ102	C.RESISTOR 1/4W 1K	2	
R31013		ERDS2TJ331	C.RESISTOR 1/4W 330	1	
R31014		ERDS2TJ103	C.RESISTOR 1/4W 10K	1	
R31015		ERDS2TJ151	C.RESISTOR 1/4W 150	1	
R31016,17		ERDS2TJ331	C.RESISTOR 1/4W 330	2	
R31018		ERDS2TJ123	C.RESISTOR 1/4W 12K	1	
R31020		ERDS2TJ471	C.RESISTOR 1/4W 470	1	
R31021		ERDS2TJ151	C.RESISTOR 1/4W 150	1	
R31022		ERDS2TJ152	C.RESISTOR 1/4W 1.5K	1	
R31023		ERDS2TJ561	C.RESISTOR 1/4W 560	1	
R31024		ERDS2TJ330	C.RESISTOR 1/4W 33	1	
R31025		ERDS2TJ561	C.RESISTOR 1/4W 560	1	
R31026		ERDS2TJ223	C.RESISTOR 1/4W 22K	1	
R31027		ERDS2TJ151	C.RESISTOR 1/4W 150	1	
R31028		ERDS2TJ822	C.RESISTOR 1/4W 8.2K	1	
R31029		ERDS2TJ471	C.RESISTOR 1/4W 470	1	
R31030		ERDS2TJ331	C.RESISTOR 1/4W 330	1	
R31031		ERDS2TJ271	C.RESISTOR 1/4W 270	1	
R31032		ERDS2TJ102	C.RESISTOR 1/4W 1K	1	
R31033		ERDS2TJ681	C.RESISTOR 1/4W 680	1	
R31034		ERDS2TJ750	C.RESISTOR 1/4W 75	1	
R31037,38		ERDS2TJ102	C.RESISTOR 1/4W 1K	2	
R31039		ERDS2TJ561	C.RESISTOR 1/4W 560	1	
R31040		ERDS2TJ102	C.RESISTOR 1/4W 1K	1	
R31041		ERDS2TJ223	C.RESISTOR 1/4W 22K	1	
R31042		ERDS2TJ103	C.RESISTOR 1/4W 10K	1	
R31043		ERDS2TJ182	C.RESISTOR 1/4W 1.8K	1	
R31044		ERDS2TJ102	C.RESISTOR 1/4W 1K	1	
R31045		ERDS2TJ561	C.RESISTOR 1/4W 560	1	
R31046		ERDS2TJ102	C.RESISTOR 1/4W 1K	1	
R31047,48		ERDS2TJ561	C.RESISTOR 1/4W 560	2	
R31049,50		ERDS2TJ103	C.RESISTOR 1/4W 10K	2	
R31051		ERDS2TJ102	C.RESISTOR 1/4W 1K	1	
R31052		ERDS2TJ471	C.RESISTOR 1/4W 470	1	
R31053		ERDS2TJ123	C.RESISTOR 1/4W 12K	1	
R31054		ERDS2TJ562	C.RESISTOR 1/4W 5.6K	1	
R31055		ERDS2TJ223	C.RESISTOR 1/4W 22K	1	
R31057		ERDS2TJ220	C.RESISTOR 1/4W 22	1	
R31058		ERDS2TJ100	C.RESISTOR 1/4W 10	1	

Ref.No.		Part No.	Part Name & Description	Pcs	Remarks
R31059		ERDS2TJ393	C.RESISTOR 1/4W 39K	1	
R31060		ERDS2TJ123	C.RESISTOR 1/4W 12K	1	
R31061		ERDS2TJ331	C.RESISTOR 1/4W 330	1	
R31062		ERDS2TJ222	C.RESISTOR 1/4W 2.2K	1	
R31063		ERDS2TJ103	C.RESISTOR 1/4W 10K	1	
R31066		ERDS2TJ221	C.RESISTOR 1/4W 220	1	
R31067		ERDS2TJ331	C.RESISTOR 1/4W 330	1	
R31068,69		ERDS2TJ223	C.RESISTOR 1/4W 22K	2	
R31070		ERDS2TJ103	C.RESISTOR 1/4W 10K	1	
R31071		ERDS2TJ333	C.RESISTOR 1/4W 33K	1	
R31072		ERDS2TJ152	C.RESISTOR 1/4W 1.5K	1	
R31073		ERDS2TJ561	C.RESISTOR 1/4W 560	1	
R31074		ERDS2TJ223	C.RESISTOR 1/4W 22K	1	
R31075		ERDS2TJ222	C.RESISTOR 1/4W 2.2K	1	
R31076		ERDS2TJ152	C.RESISTOR 1/4W 1.5K	1	
R31077		ERDS2TJ222	C.RESISTOR 1/4W 2.2K	1	
R31078		ERDS2TJ682	C.RESISTOR 1/4W 6.8K	1	
VR31001		EVM38GA00B23	V.RESISTOR 2K	1	
VR31002,03		EVM38GA00B22	V.RESISTOR 200	2	
VR31004		EVM38GA00B13	V.RESISTOR 1K	1	
VR31005		EVM38GA00B23	V.RESISTOR 2K	1	
VR31006		EVM38GA00B24	V.RESISTOR 20K	1	
VR31008-11		EVM38GA00B14	V.RESISTOR 10K	4	
	■	VEP05141B	HEAD AMP C.B.A.		
C4809		VCYD1C104MR1	S.CAPACITOR 16V 0.1U	1	
C4810,11		ECCF1H560K	C.CAPACITOR 50V 56P	2	
C4812		ECEA1HK010	E.CAPACITOR 50V 1U	1	
C4813,14		ECKF1H103ZF	C.CAPACITOR 50V 0.01U	2	
C4815		ECEA1HK010	E.CAPACITOR 50V 1U	1	
C4816		ECEA0JK330	E.CAPACITOR 6.3V 33U	1	
C4817		ECKF1H103ZF	C.CAPACITOR 50V 0.01U	1	
C4818		ECKF1H102KB	C.CAPACITOR 50V 1000P	1	
C4819		ECKF1H103ZF	C.CAPACITOR 50V 0.01U	1	
C4820		ECCF1H221JC	C.CAPACITOR 50V 220P	1	
C4821		ECKF1H331KB	C.CAPACITOR 50V 330P	1	
C4822		ECQB1H682KH	P.CAPACITOR 50V 6800P	1	
C4823		ECKF1H103ZF	C.CAPACITOR 50V 0.01U	1	
C4824		ECEA1HK0R1	E.CAPACITOR 50V 0.1U	1	
C4825		ECKF1H103ZF	C.CAPACITOR 50V 0.01U	1	
C4826		ECEA1HK2R2	E.CAPACITOR 50V 2.2U	1	
C4827,28		ECKF1H103ZF	C.CAPACITOR 50V 0.01U	2	
C4829		ECEA0JK470	E.CAPACITOR 6.3V 47U	1	
C4830,31		ECKF1H103ZF	C.CAPACITOR 50V 0.01U	2	
C4832		ECEA0JK220	E.CAPACITOR 6.3V 22U	1	
C5002		ECEA0JK470	E.CAPACITOR 6.3V 47U	1	
C5023		ECKF1H103ZF	C.CAPACITOR 50V 0.01U	1	
C5024		ECEA1CK470U	E.CAPACITOR 16V 47U	1	
C5025		ECKF1H103ZF	C.CAPACITOR 50V 0.01U	1	
C5026		ECQV1H104JZ	P.CAPACITOR 50V 0.1U	1	
C5028		ECQV1H104JZ	P.CAPACITOR 50V 0.1U	1	
C5029		ECKF1H103ZF	C.CAPACITOR 50V 0.01U	1	
C5030		ECEA0JK470	E.CAPACITOR 6.3V 47U	1	
C5031		ECKF1H103ZF	C.CAPACITOR 50V 0.01U	1	
C5032		ECEA1CK470U	E.CAPACITOR 16V 47U	1	
C5033		ECKF1H103ZF	C.CAPACITOR 50V 0.01U	1	
C5034		ECEA1CK470U	E.CAPACITOR 16V 47U	1	
C5035		ECKF1H103ZF	C.CAPACITOR 50V 0.01U	1	
C5037,38		ECKF1H103ZF	C.CAPACITOR 50V 0.01U	2	
C5039		ECEA0JK470	E.CAPACITOR 6.3V 47U	1	
C5041		ECCF1H560KC	C.CAPACITOR 50V 56P	1	
C5043		ECKF1H102KB	C.CAPACITOR 50V 1000P	1	
C5044-46		ECEA1CK100	E.CAPACITOR 16V 10U	3	
C5047		ECEA1HK010	E.CAPACITOR 50V 1U	1	
C5048,49		ECQV1H104JZ	P.CAPACITOR 50V 0.1U	2	

Ref.No.		Part No.	Part Name & Description	Pcs	Remarks
C5050		ECKF1H103ZF	C.CAPACITOR 50V 0.01U	1	
C5051		ECEA0JK470	E.CAPACITOR 6.3V 47U	1	
C5052		ECCF1H101KC	C.CAPACITOR 50V 100P	1	
C5053		ECCF1H560KC	C.CAPACITOR 50V 56P	1	
C5055		ECKF1H102KB	C.CAPACITOR 50V 1000P	1	
C5056-58		ECEA1CK100	E.CAPACITOR 16V 10U	3	
C5059		ECEA1HK010	E.CAPACITOR 50V 1U	1	
C5060,61		ECQV1H104JZ	P.CAPACITOR 50V 0.1U	2	
C5062-64		ECKF1H103ZF	C.CAPACITOR 50V 0.01U	3	
C5065,66		ECCF1H680KC	C.CAPACITOR 50V 68P	2	
C5067		VCKD1H431JA	C.CAPACITOR 50V 430P	1	
C5068		ECQV1H104JZ	P.CAPACITOR 50V 0.1U	1	
C5069		ECKF1H103ZF	C.CAPACITOR 50V 0.01U	1	
C5070		ECEA1CK470U	E.CAPACITOR 16V 47U	1	
C5071-74		ECKF1H103ZF	C.CAPACITOR 50V 0.01U	4	
C5075		VCKD1H431JA	C.CAPACITOR 50V 430P	1	
C5076		ECKF1H103ZF	C.CAPACITOR 50V 0.01U	1	
C5078		ECKF1H103ZF	C.CAPACITOR 50V 0.01U	1	
C5079		ECEA1HK010	E.CAPACITOR 50V 1U	1	
C5080		ECKF1H103ZF	C.CAPACITOR 50V 0.01U	1	
C5081		ECCF1H121JC	C.CAPACITOR 50V 120P	1	
CA5001		EXFP6103ZW	C & C	1	
D5005,06		MA165	DIODE	2	<R>
FL4801		VLF0493	FILTER	1	
IC4801		UPC1531HA	IC	1	<R>
IC4802		AN3920K	IC	1	<R>
IC5001,02		AN6336	IC	2	<R>
IC5003		UPD4053BC	IC	1	<R>
L4802,03		VLQEL05F101K	COIL 100UH	2	
L4804,05		VLP0017	COIL	2	
L4806		VLQEL05F101K	COIL 100UH	1	
L5002		VLQEL05F221K	COIL 220UH	1	
L5006		VLQEL05F221K	COIL 220UH	1	
L5007		VLQEL05F101K	COIL 100UH	1	
L5008		VLQEL05F331K	COIL 330UH	1	
L5009		VLQEL05F101K	COIL 100UH	1	
L5010,11		VLQEL05F221K	COIL 220UH	2	
L5012,13		VLQEL05F681K	COIL 680UH	2	
L5015,16		VLQEL05F821K	COIL 820UH	2	
L5017,18		VLQEL05F100K	COIL 10UH	2	
L5019		VLQEL05F151K	COIL 150UH	1	
L5020,21		VLQEL05F101K	COIL 100UH	2	
L5022		VLQEL05F151K	COIL 150UH	1	
P4801		VJP1237T	CONNECTOR(MALE) 10P	1	
P4802		VJP1233T	CONNECTOR(MALE) 6P	1	
P4803		VJP1229	CONNECTOR(MALE) 2P	1	
P4804		VJP1229T	CONNECTOR(MALE) 2P	1	
P5001		VJP1238T	CONNECTOR(MALE) 11P	1	
P5002		VJP1239T	CONNECTOR(MALE) 12P	1	
P5003		VJP1231R	CONNECTOR(MALE) 4P	1	
P5004		VJP1235T	CONNECTOR(MALE) 8P	1	
Q4806-08		2SD638	TRANSISTOR	3	(Q,R)<R>
Q4809-11		2SD636	TRANSISTOR	3	(Q,R)<R>
Q5002,03		2SB643	TRANSISTOR	2	(Q,R)<R>

Ref.No.		Part No.	Part Name & Description	Pcs	Remarks
Q5015		2SB641	TRANSISTOR	1	(Q,R)<R>
Q5017		2SA1254	TRANSISTOR	1	<R>
Q5018		2SB641	TRANSISTOR	1	(Q,R)<R>
Q5019		2SA1254	TRANSISTOR	1	<R>
Q5020-23		2SC3704	TRANSISTOR	4	<R>
Q5024-27		2SD638	TRANSISTOR	4	(Q,R)<R>
Q5028,29		2SD636	TRANSISTOR	2	(Q,R)<R>
Q5031		2SD636	TRANSISTOR	1	(Q,R)<R>
Q5032-34		2SC2206	TRANSISTOR	3	(B,C)<R>
Q5035,36		2SD636	TRANSISTOR	2	(Q,R)<R>
QR5003		UN1112	TRANSISTOR-RESISTOR	1	<R>
QR5004		UN1212	TRANSISTOR-RESISTOR	1	<R>
R4817,18		ERDS2TJ100	C.RESISTOR 1/4W 10	2	
R4820,21		ERDS2TJ102	C.RESISTOR 1/4W 1K	2	
R4822		ERDS2TJ223	C.RESISTOR 1/4W 22K	1	
R4823,24		ERDS2TJ561	C.RESISTOR 1/4W 560	2	
R4825		ERDS2TJ153	C.RESISTOR 1/4W 15K	1	
R4826,27		ERDS2TJ393	C.RESISTOR 1/4W 39K	2	
R4828		ERDS2TJ153	C.RESISTOR 1/4W 15K	1	
R4829		ERDS2TJ273	C.RESISTOR 1/4W 27K	1	
R4830		ERDS2TJ473	C.RESISTOR 1/4W 47K	1	
R4831		ERDS2TJ332	C.RESISTOR 1/4W 3.3K	1	
R4832		ERDS2TJ102	C.RESISTOR 1/4W 1K	1	
R4833		ERDS2TJ473	C.RESISTOR 1/4W 47K	1	
R4834		ERDS2TJ182	C.RESISTOR 1/4W 1.8K	1	
R4835,36		ERDS2TJ152	C.RESISTOR 1/4W 1.5K	2	
R4837		ERDS2TJ182	C.RESISTOR 1/4W 1.8K	1	
R4838		ERDS2TJ100	C.RESISTOR 1/4W 10	1	
R4839,40		ERDS2TJ223	C.RESISTOR 1/4W 22K	2	
R4841		ERDS2TJ102	C.RESISTOR 1/4W 1K	1	
R4842,43		ERDS2TJ223	C.RESISTOR 1/4W 22K	2	
R4844,45		ERDS2TJ103	C.RESISTOR 1/4W 10K	2	
R5003		ERDS2TJ562	C.RESISTOR 1/4W 5.6K	1	
R5004		ERDS2TJ223	C.RESISTOR 1/4W 22K	1	
R5005		ERDS2TJ562	C.RESISTOR 1/4W 5.6K	1	
R5006		ERDS2TJ223	C.RESISTOR 1/4W 22K	1	
R5007		ERDS2TJ122	C.RESISTOR 1/4W 1.2K	1	
R5052		ERDS2TJ330	C.RESISTOR 1/4W 33	1	
R5053,54		ERDS2TJ102	C.RESISTOR 1/4W 1K	2	
R5055,56		ERDS2TJ223	C.RESISTOR 1/4W 22K	2	
R5057		ERDS2TJ102	C.RESISTOR 1/4W 1K	1	
R5058		ERDS2TJ221	C.RESISTOR 1/4W 220	1	
R5059		ERDS2TJ561	C.RESISTOR 1/4W 560	1	
R5060		ERDS2TJ562	C.RESISTOR 1/4W 5.6K	1	
R5061		ERDS2TJ153	C.RESISTOR 1/4W 15K	1	
R5062		ERDS2TJ101	C.RESISTOR 1/4W 100	1	
R5063,64		ERDS2TJ183	C.RESISTOR 1/4W 18K	2	
R5065		ERDS2TJ222	C.RESISTOR 1/4W 2.2K	1	
R5068		ERDS2TJ330	C.RESISTOR 1/4W 33	1	
R5069		ERDS2TJ102	C.RESISTOR 1/4W 1K	1	
R5070		ERDS2TJ391	C.RESISTOR 1/4W 390	1	
R5071		ERDS2TJ681	C.RESISTOR 1/4W 680	1	
R5072		ERDS2TJ102	C.RESISTOR 1/4W 1K	1	
R5073		ERDS2TJ562	C.RESISTOR 1/4W 5.6K	1	
R5074		ERDS2TJ153	C.RESISTOR 1/4W 15K	1	
R5075		ERDS2TJ101	C.RESISTOR 1/4W 100	1	
R5076		ERDS2TJ102	C.RESISTOR 1/4W 1K	1	
R5078		ERDS2TJ102	C.RESISTOR 1/4W 1K	1	
R5079,80		ERDS2TJ222	C.RESISTOR 1/4W 2.2K	2	
R5081		ERDS2TJ332	C.RESISTOR 1/4W 3.3K	1	
R5082,83		ERDS2TJ821	C.RESISTOR 1/4W 820	2	
R5084,85		ERDS2TJ183	C.RESISTOR 1/4W 18K	2	
R5086		ERDS2TJ222	C.RESISTOR 1/4W 2.2K	1	
R5087		ERDS2TJ102	C.RESISTOR 1/4W 1K	1	
R5088		ERDS2TJ103	C.RESISTOR 1/4W 10K	1	
R5090		ERDS2TJ102	C.RESISTOR 1/4W 1K	1	
R5091		ERDS2TJ222	C.RESISTOR 1/4W 2.2K	1	
R5092		ERDS2TJ332	C.RESISTOR 1/4W 3.3K	1	
R5093,94		ERDS2TJ102	C.RESISTOR 1/4W 1K	2	

Ref.No.		Part No.	Part Name & Description	Pcs	Remarks
R5095,96		ERDS2TJ183	C.RESISTOR 1/4W 18K	2	
R5097,98		ERDS2TJ272	C.RESISTOR 1/4W 2.7K	2	
R5099-02		ERDS2TJ100	C.RESISTOR 1/4W 10	4	
R5103,04		ERDS2TJ272	C.RESISTOR 1/4W 2.7K	2	
R5105		ERDS2TJ100	C.RESISTOR 1/4W 10	1	
R5111		ERDS2TJ122	C.RESISTOR 1/4W 1.2K	1	
R5112-15		ERDS2TJ103	C.RESISTOR 1/4W 10K	4	
R5116,17		ERDS2TJ471	C.RESISTOR 1/4W 470	2	
R5118-20		ERDS2TJ223	C.RESISTOR 1/4W 22K	3	
R5121		ERDS2TJ103	C.RESISTOR 1/4W 10K	1	
R5123		ERDS2TJ473	C.RESISTOR 1/4W 47K	1	
R5124		ERDS2TJ123	C.RESISTOR 1/4W 12K	1	
R5125		ERDS2TJ102	C.RESISTOR 1/4W 1K	1	
R5126		ERDS2TJ331	C.RESISTOR 1/4W 330	1	
R5127		ERDS2TJ101	C.RESISTOR 1/4W 100	1	
R5128		ERDS2TJ222	C.RESISTOR 1/4W 2.2K	1	
R5129		ERDS2TJ471	C.RESISTOR 1/4W 470	1	
R5130		ERDS2TJ152	C.RESISTOR 1/4W 1.5K	1	
R5131		ERDS2TJ561	C.RESISTOR 1/4W 560	1	
R5132		ERDS2TJ222	C.RESISTOR 1/4W 2.2K	1	
R5133		ERDS2TJ330	C.RESISTOR 1/4W 33	1	
R5134		ERDS2TJ103	C.RESISTOR 1/4W 10K	1	
R5135		ERDS2TJ223	C.RESISTOR 1/4W 22K	1	
R5136		ERDS2TJ101	C.RESISTOR 1/4W 100	1	
R5137		ERDS2TJ103	C.RESISTOR 1/4W 10K	1	
R5138		ERDS2TJ101	C.RESISTOR 1/4W 100	1	
R5146,47		ERDS2TJ102	C.RESISTOR 1/4W 1K	2	
R5148		ERDS2TJ104	C.RESISTOR 1/4W 100K	1	
VR4801		EVN32CA00B54	V.RESISTOR 50K	1	
VR5001		EVM31GA00B23	V.RESISTOR 2K	1	
			MISCELLANEOUS		
E65		VMP0905	SUPPORT	1	
E66		VSC2101	SHIELD CASE (MIDDLE)	1	
E67		VSC2102	SHIELD CASE (LOWER)	1	
E68		VSC2104	SHIELD CASE (MIDDLE)	1	
E69		VSC2105	SHIELD CASE (LOWER)	1	
	■	VEP04134F	HD AUDIO C.B.A.		
C4306		ECEA1HK010	E.CAPACITOR 50V 1U	1	
C4307		VCEA1CAE470	E.CAPACITOR 16V 47U	1	
C4308		VCEA0JAE101	E.CAPACITOR 6.3V 100U	1	
C4310		VCEA1CAE470	E.CAPACITOR 16V 47U	1	
C4311		ECEA0JK101U	E.CAPACITOR 6.3V 100U	1	
C4313		VCEA1CAE470	E.CAPACITOR 16V 47U	1	
C4314,15		VCEA1CAE101	E.CAPACITOR 16V 100U	2	
C4316-19		VCEA1HAE3R3	E.CAPACITOR 50V 3.3U	4	
C4320		VCEA1CAE470	E.CAPACITOR 16V 47U	1	
C4321,22		VCEA1CAE330	E.CAPACITOR 16V 33U	2	
C4323,24		ECCF1H330KC	C.CAPACITOR 50V 33P	2	
C4325		VCEA1AAE101	E.CAPACITOR 10V 100U	1	
C4326,27		VCEA1HAE3R3	E.CAPACITOR 50V 3.3U	2	
C4328		ECKF1H103ZF	C.CAPACITOR 50V 0.01U	1	
C4329		VCEA1CAE330	E.CAPACITOR 16V 33U	1	
C4330		VCEA1AAE470	E.CAPACITOR 10V 47U	1	
C4331		ECQB1H102KH	P.CAPACITOR 50V 1000P	1	
C4332		ECQB1H222KH	P.CAPACITOR 50V 2200P	1	
C4333		ECQB1H102KH	P.CAPACITOR 50V 1000P	1	
C4334		ECQB1H103KH	P.CAPACITOR 50V 0.01U	1	
C4335		ECQB1H103JH	P.CAPACITOR 50V 0.01U	1	
C4336		VCEA1CAG100	E.CAPACITOR 16V 10U	1	
C4337		VCEA0JAG470	E.CAPACITOR 6.3V 47U	1	
C4339		VCEA1CAE100	E.CAPACITOR 16V 10U	1	

Ref.No.		Part No.	Part Name & Description	Pcs	Remarks
C4340,41		VCEA1AAE470	E.CAPACITOR 10V 47U	2	
C4342		ECQB1H102KH	P.CAPACITOR 50V 1000P	1	
C4343		ECQB1H222KH	P.CAPACITOR 50V 2200P	1	
C4344		VCEA1HAE3R3	E.CAPACITOR 50V 3.3U	1	
C4345		ECQB1H222JH	P.CAPACITOR 50V 2200P	1	
C4347		ECEA25Z4R7	E.CAPACITOR 25V 4.7U	1	
C4348		ECQB1H223JH	P.CAPACITOR 50V 0.022U	1	
C4349		ECEA16Z10	E.CAPACITOR 16V 10U	1	
C4350		ECKF1H103ZF	C.CAPACITOR 50V 0.01U	1	
C4351		VCEA1CAE330	E.CAPACITOR 16V 33U	1	
C4352		VCEA1AAE470	E.CAPACITOR 10V 47U	1	
C4353,54		ECQB1H102KH	P.CAPACITOR 50V 1000P	2	
C4355		ECQB1H222KH	P.CAPACITOR 50V 2200P	1	
C4356		ECQB1H103KH	P.CAPACITOR 50V 0.01U	1	
C4357		ECQB1H103JH	P.CAPACITOR 50V 0.01U	1	
C4358		VCEA1CAG100	E.CAPACITOR 16V 10U	1	
C4359		VCEA0JAG470	E.CAPACITOR 6.3V 47U	1	
C4361		VCEA1CAE100	E.CAPACITOR 16V 10U	1	
C4362,63		VCEA1AAE470	E.CAPACITOR 10V 47U	2	
C4364		ECQB1H102KH	P.CAPACITOR 50V 1000P	1	
C4365		ECQB1H222KH	P.CAPACITOR 50V 2200P	1	
C4366		VCEA1HAE3R3	E.CAPACITOR 50V 3.3U	1	
C4367		ECQB1H222JH	P.CAPACITOR 50V 2200P	1	
C4369		ECQB1H223JH	P.CAPACITOR 50V 0.022U	1	
C4370		ECEA25Z4R7	E.CAPACITOR 25V 4.7U	1	
C4371		ECEA16Z10	E.CAPACITOR 16V 10U	1	
C4372		ECCF1H101KC	C.CAPACITOR 50V 100P	1	
C4374		VCEA1AAE220	E.CAPACITOR 10V 22U	1	
C4375		ECCF1H820K	C.CAPACITOR 50V 82P	1	
C4377		ECKF1H103ZF	C.CAPACITOR 50V 0.01U	1	
C4381		ECKF1H561KB	C.CAPACITOR 50V 560P	1	
C4382		VCEA1CAE100	E.CAPACITOR 16V 10U	1	
C4383		VCEA1AAE220	E.CAPACITOR 10V 22U	1	
C4384		ECQB1H222KH	P.CAPACITOR 50V 2200P	1	
C4385		VCEA1HAE010	E.CAPACITOR 50V 1U	1	
C4386		VCEA1HAG3R3	E.CAPACITOR 50V 3.3U	1	
C4387		ECKF1H561KB	C.CAPACITOR 50V 560P	1	
C4388		VCEA0JAE470	E.CAPACITOR 6.3V 47U	1	
C4389		ECKF1H103ZF	C.CAPACITOR 50V 0.01U	1	
C4390		ECQB1H272KH	P.CAPACITOR 50V 2700P	1	
C4391		VCEA0JAE470	E.CAPACITOR 6.3V 47U	1	
C4392		ECCF1H101KC	C.CAPACITOR 50V 100P	1	
C4394		VCEA1AAE220	E.CAPACITOR 10V 22U	1	
C4395		ECCF1H820K	C.CAPACITOR 50V 82P	1	
C4396		ECKF1H103ZF	C.CAPACITOR 50V 0.01U	1	
C4397		ECKF1H561KB	C.CAPACITOR 50V 560P	1	
C4398		ECEA1CK100	E.CAPACITOR 16V 10U	1	
C4399		VCEA1AAE220	E.CAPACITOR 10V 22U	1	
C4400		ECQB1H222KH	P.CAPACITOR 50V 2200P	1	
C4401		VCEA1HAE010	E.CAPACITOR 50V 1U	1	
C4402		VCEA1HAG3R3	E.CAPACITOR 50V 3.3U	1	
C4403		ECKF1H561KB	C.CAPACITOR 50V 560P	1	
C4404		VCEA0JAE470	E.CAPACITOR 6.3V 47U	1	
C4405		ECKF1H103ZF	C.CAPACITOR 50V 0.01U	1	
C4406		ECQB1H272KH	P.CAPACITOR 50V 2700P	1	
C4407		VCEA0JAE470	E.CAPACITOR 6.3V 47U	1	
D4301,02		MA165	DIODE	2	<R>
D4303		MA4056M	DIODE	1	<R>
D4304-06		MA165	DIODE	3	<R>
D4307,08		1S1007	DIODE	2	<R>
D4309,10		MA165	DIODE	2	<R>
D4314-17		MA165	DIODE	4	<R>
D4323		MA165	DIODE	1	<R>
IC4302,03		UPC4557C	IC	2	<R>
IC4304,05		AN6298NK	IC	2	<R>
IC4306,07		AN3922NK	IC	2	<R>

Ref.No.		Part No.	Part Name & Description	Pcs	Remarks
L4301,02		VLQEL05F221K	COIL 220UH	2	
L4303,04		VLQEL05F101K	COIL 100UH	2	
L4308		VLQ0199	COIL	1	
P4303		VJP1231T	CONNECTOR(MALE) 4P	1	
P4304		VJP1230T	CONNECTOR(MALE) 3P	1	
P4305		VJP1229T	CONNECTOR(MALE) 2P	1	
P4306		VJP1229	CONNECTOR(MALE) 2P	1	
P4307		VJP1237T	CONNECTOR(MALE) 10P	1	
P4308		VJP1229T	CONNECTOR(MALE) 2P	1	
P4309		VJP1231G	CONNECTOR(MALE) 4P	1	
Q4301		2SB641	TRANSISTOR	1	(Q,R)<R>
Q4306		2SD636	TRANSISTOR	1	(Q,R)<R>
Q4307		2SD973	TRANSISTOR	1	(Q,R,S)<R>
Q4310		2SB641	TRANSISTOR	1	(Q,R)<R>
Q4313		2SD636	TRANSISTOR	1	(Q,R)<R>
Q4314,15		2SD1330	TRANSISTOR	2	(S,T)<R>
Q4316		2SD636	TRANSISTOR	1	(Q,R)<R>
QR4301		UN1213	TRANSISTOR-RESISTOR	1	<R>
QR4302		DTC144WA	TRANSISTOR RESISTOR	1	<R>
QR4303		UN1213	TRANSISTOR-RESISTOR	1	<R>
QR4304		UN1212	TRANSISTOR-RESISTOR	1	<R>
QR4305		UN1112	TRANSISTOR-RESISTOR	1	<R>
QR4306		UN1113	TRANSISTOR-RESISTOR	1	<R>
QR4307		DTC144WA	TRANSISTOR RESISTOR	1	<R>
QR4308		UN1213	TRANSISTOR-RESISTOR	1	<R>
QR4309		DTC144WA	TRANSISTOR RESISTOR	1	<R>
QR4312		DTC144WA	TRANSISTOR RESISTOR	1	<R>
QR4313		UN1111	TRANSISTOR-RESISTOR	1	<R>
QR4314		DTC144WA	TRANSISTOR RESISTOR	1	<R>
R4307		ERDS2TJ473	C.RESISTOR 1/4W 47K	1	
R4308		ERDS2TJ223	C.RESISTOR 1/4W 22K	1	
R4309		ERDS2TJ472	C.RESISTOR 1/4W 4.7K	1	
R4310		ERDS2TJ103	C.RESISTOR 1/4W 10K	1	
R4311		ERDS2TJ102	C.RESISTOR 1/4W 1K	1	
R4312		ERDS2TJ273	C.RESISTOR 1/4W 27K	1	
R4316		ERDS2TJ223	C.RESISTOR 1/4W 22K	1	
R4317		ERDS2TJ103	C.RESISTOR 1/4W 10K	1	
R4318		ERDS2TJ272	C.RESISTOR 1/4W 2.7K	1	
R4323		ERDS2TJ103	C.RESISTOR 1/4W 10K	1	
R4324		ERDS2TJ563	C.RESISTOR 1/4W 56K	1	
R4325		ERDS2TJ223	C.RESISTOR 1/4W 22K	1	
R4326		ERDS2TJ103	C.RESISTOR 1/4W 10K	1	
R4327		ERDS2TJ823	C.RESISTOR 1/4W 82K	1	
R4328,29		ERDS2TJ473	C.RESISTOR 1/4W 47K	2	
R4330,31		ERDS2TJ104	C.RESISTOR 1/4W 100K	2	
R4332		ERDS2TJ102	C.RESISTOR 1/4W 1K	1	
R4333		ERDS2TJ473	C.RESISTOR 1/4W 47K	1	
R4334		ERDS2TJ102	C.RESISTOR 1/4W 1K	1	
R4335		ERDS2TJ473	C.RESISTOR 1/4W 47K	1	
R4336,37		ERDS2TJ102	C.RESISTOR 1/4W 1K	2	
R4338,39		ERDS2TJ104	C.RESISTOR 1/4W 100K	2	
R4340		ERDS2TJ273	C.RESISTOR 1/4W 27K	1	
R4341		ERDS2TJ562	C.RESISTOR 1/4W 5.6K	1	
R4342		ERDS2TJ273	C.RESISTOR 1/4W 27K	1	
R4343		ERDS2TJ562	C.RESISTOR 1/4W 5.6K	1	
R4346		ERDS2TJ563	C.RESISTOR 1/4W 56K	1	
R4347,48		ERDS2TJ103	C.RESISTOR 1/4W 10K	2	
R4354		ERDS2TJ472	C.RESISTOR 1/4W 4.7K	1	
R4355		EROS2CKG6201	M.RESISTOR 1/4W 6.2K	1	
R4356		ERDS2TJ681	C.RESISTOR 1/4W 680	1	
R4357		EROS2CKG2401	M.RESISTOR 1/4W 2.4K	1	
R4358		EROS2CKG1802	M.RESISTOR 1/4W 18K	1	
R4359		EROS2CKG5601	M.RESISTOR 1/4W 5.6K	1	

Ref.No.		Part No.	Part Name & Description	Pcs	Remarks
R4360,61		ERDS2TJ473	C.RESISTOR 1/4W 47K	2	
R4362		ERDS2TJ562	C.RESISTOR 1/4W 5.6K	1	
R4363		ERDS2TJ332	C.RESISTOR 1/4W 3.3K	1	
R4364		ERQS2CKG1302	M.RESISTOR 1/4W 13K	1	
R4365		ERQS2CKG9101	M.RESISTOR 1/4W 9.1K	1	
R4367		ERDS2TJ682	C.RESISTOR 1/4W 6.8K	1	
R4368		ERDS2TJ392	C.RESISTOR 1/4W 3.9K	1	
R4374		ERDS2TJ682	C.RESISTOR 1/4W 6.8K	1	
R4375		ERDS2TJ183	C.RESISTOR 1/4W 18K	1	
R4376		ERDS2TJ101	C.RESISTOR 1/4W 100	1	
R4377		ERDS2TJ123	C.RESISTOR 1/4W 12K	1	
R4378		ERDS2TJ473	C.RESISTOR 1/4W 47K	1	
R4381		ERDS2TJ562	C.RESISTOR 1/4W 5.6K	1	
R4382		ERDS2TJ472	C.RESISTOR 1/4W 4.7K	1	
R4383		ERDS2TJ122	C.RESISTOR 1/4W 1.2K	1	
R4384		ERQS2CKG6201	M.RESISTOR 1/4W 6.2K	1	
R4385		ERDS2TJ681	C.RESISTOR 1/4W 680	1	
R4386		ERQS2CKG2401	M.RESISTOR 1/4W 2.4K	1	
R4387		ERQS2CKG5601	M.RESISTOR 1/4W 5.6K	1	
R4388		ERQS2CKG1802	M.RESISTOR 1/4W 18K	1	
R4389		ERDS2TJ473	C.RESISTOR 1/4W 47K	1	
R4390		ERDS2TJ562	C.RESISTOR 1/4W 5.6K	1	
R4391		ERDS2TJ332	C.RESISTOR 1/4W 3.3K	1	
R4392		ERQS2CKG1302	M.RESISTOR 1/4W 13K	1	
R4393		ERQS2CKG9101	M.RESISTOR 1/4W 9.1K	1	
R4394		ERQS2CKG1101	M.RESISTOR 1/4W 1.1K	1	
R4395		ERQS2CKG1002	M.RESISTOR 1/4W 10K	1	
R4396		ERDS2TJ223	C.RESISTOR 1/4W 22K	1	
R4398		ERDS2TJ682	C.RESISTOR 1/4W 6.8K	1	
R4399		ERDS2TJ473	C.RESISTOR 1/4W 47K	1	
R4400		ERDS2TJ272	C.RESISTOR 1/4W 2.7K	1	
R4401		ERDS2TJ682	C.RESISTOR 1/4W 6.8K	1	
R4402		ERDS2TJ183	C.RESISTOR 1/4W 18K	1	
R4403		ERDS2TJ101	C.RESISTOR 1/4W 100	1	
R4404		ERDS2TJ123	C.RESISTOR 1/4W 12K	1	
R4405		ERDS2TJ473	C.RESISTOR 1/4W 47K	1	
R4406		ERDS2TJ392	C.RESISTOR 1/4W 3.9K	1	
R4407		ERDS2TJ393	C.RESISTOR 1/4W 39K	1	
R4409		ERDS2TJ223	C.RESISTOR 1/4W 22K	1	
R4410		ERQS2CKG1101	M.RESISTOR 1/4W 1.1K	1	
R4411		ERQS2CKG1002	M.RESISTOR 1/4W 10K	1	
R4412		ERDS2TJ122	C.RESISTOR 1/4W 1.2K	1	
R4413		ERDS2TJ473	C.RESISTOR 1/4W 47K	1	
R4414		ERDS2TJ223	C.RESISTOR 1/4W 22K	1	
R4418		ERDS2TJ102	C.RESISTOR 1/4W 1K	1	
R4422		ERDS2TJ102	C.RESISTOR 1/4W 1K	1	
R4426		ERDS2TJ473	C.RESISTOR 1/4W 47K	1	
R4427		ERX12ANJ1R8	M.RESISTOR 1/2W 1.8	1	
VR4301		EVN38CA00B53	V.RESISTOR 5K	1	
VR4303		EVN38CA00B23	V.RESISTOR 2K	1	
VR4306		EVN38CA00B53	V.RESISTOR 5K	1	
VR4308		EVN38CA00B23	V.RESISTOR 2K	1	
			MISCELLANEOUS		
E63		VMP0903	SUPPORT	1	
E64		VSC1799	SHIELD PLATE	1	
	■	VEP06564B	SYSTEM CONTROL C.B.A.		
C6001,02		ECKF1H103ZF	C.CAPACITOR 50V 0.01U	2	
C6003		ECKF1H472ZF	C.CAPACITOR 50V 4700P	1	
C6004		ECEA1CK470U	E.CAPACITOR 16V 47U	1	
C6005		ECKF1H103ZF	C.CAPACITOR 50V 0.01U	1	
C6006		ECEA1EK470	E.CAPACITOR 25V 47U	1	

Ref.No.		Part No.	Part Name & Description	Pcs	Remarks
C6007,08		ECEA1HN2R2S	E.CAPACITOR 50V 2.2U	2	
C6009-11		ECEA1HK3R3	E.CAPACITOR 50V 3.3U	3	
C6013		ECEA1EU221	E.CAPACITOR 25V 220U	1	
C6014		ECQV1H104JZ	P.CAPACITOR 50V 0.1U	1	
C6015		ECEA1HK010	E.CAPACITOR 50V 1U	1	
C6016,17		ECCF1H680JC	C.CAPACITOR 50V 68P	2	
C6019		ECCF1H101JC	C.CAPACITOR 50V 100P	1	
C6025		ECQP1H104GZ	P.CAPACITOR 50V 0.1U	1	
C6044		ECKF1H103ZF	C.CAPACITOR 50V 0.01U	1	
C6047		ECKF1H103ZF	C.CAPACITOR 50V 0.01U	1	
C6056		ECKF1H103ZF	C.CAPACITOR 50V 0.01U	1	
C6057		ECEA0JK470	E.CAPACITOR 6.3V 47U	1	
C6077		ECEA0JK470	E.CAPACITOR 6.3V 47U	1	
C6078		ECEA1CK100	E.CAPACITOR 16V 10U	1	
D6003		RD10FB	ZENER 10V	1	<R>
D6004-14		MA165	DIODE	11	<R>
D6030		MA165	DIODE	1	<R>
D6034		MA165	DIODE	1	<R>
D6036		MA165	DIODE	1	<R>
D6057		MA165	DIODE	1	<R>
IC6001		UPD1512AC154	IC	1	<R>
IC6002		UPC339C	IC	1	<R>
IC6003,04		PU3124	IC	2	<R>
IC6005		BA6238A	IC	1	<!><R>
IC6007		UPD4030BC	IC	1	<R>
IC6009		BA236B	IC	1	<R>
IC6015		UPD4013BC	IC	1	<R>
IC6017		AN90B22	IC	1	<R>
L6001		VLQEL05F5R6K	COIL 5.6UH	1	
P6001		VJP1236T	CONNECTOR(MALE) 9P	1	
P6002		VJP1237T	CONNECTOR(MALE) 10P	1	
P6003		VJP1230G	CONNECTOR(MALE) 3P	1	
P6004		VJP1231T	CONNECTOR(MALE) 4P	1	
P6005		VJP1232T	CONNECTOR(MALE) 5P	1	
P6006		VJP1231B	CONNECTOR(MALE) 4P	1	
P6007		VJP1234T	CONNECTOR(MALE) 7P	1	
P6008		VJP1230	CONNECTOR(MALE) 3P	1	
P6010		VJP1232R	CONNECTOR(MALE) 5P	1	
P6011		VJP1229	CONNECTOR(MALE) 2P	1	
P6012		VJP1230T	CONNECTOR(MALE) 3P	1	
P6013		VJP1231R	CONNECTOR(MALE) 4P	1	
P6014		VJP1229T	CONNECTOR(MALE) 2P	1	
Q6001		2SC3811	TRANSISTOR	1	(Q,R)<R>
Q6002		2SD636	TRANSISTOR	1	(Q,R)<R>
Q6003		2SB644	TRANSISTOR	1	(Q,R)<R>
Q6004-18		2SD636	TRANSISTOR	15	(Q,R)<R>
QR6012,13		UN1111	TRANSISTOR-RESISTOR	2	<R>
QR6015,16		UN1214	TRANSISTOR-RESISTOR	2	<R>
R6001,02		ERDS2TJ473	C.RESISTOR 1/4W 47K	2	
R6003		ERDS2TJ153	C.RESISTOR 1/4W 15K	1	
R6004		ERDS2TJ472	C.RESISTOR 1/4W 4.7K	1	
R6005,06		ERDS2TJ103	C.RESISTOR 1/4W 10K	2	
R6007		ERDS2TJ333	C.RESISTOR 1/4W 33K	1	
R6008		ERDS2TJ105	C.RESISTOR 1/4W 1000K	1	

Ref.No.		Part No.	Part Name & Description	Pcs	Remarks
R6009		ERDS2TJ224	C.RESISTOR 1/4W 220K	1	
R6010		ERDS2TJ184	C.RESISTOR 1/4W 180K	1	
R6011		ERDS2TJ103	C.RESISTOR 1/4W 10K	1	
R6012		ERDS2TJ105	C.RESISTOR 1/4W 1000K	1	
R6013,14		ERDS2TJ103	C.RESISTOR 1/4W 10K	2	
R6015		ERDS2TJ680	C.RESISTOR 1/4W 68	1	
R6016,17		ERD50TJ181	C.RESISTOR 1/2W 180	2	
R6018,19		ERDS2TJ222	C.RESISTOR 1/4W 2.2K	2	
R6020-23		ERDS2TJ103	C.RESISTOR 1/4W 10K	4	
R6024		ERDS2TJ472	C.RESISTOR 1/4W 4.7K	1	
R6025		ERDS2TJ473	C.RESISTOR 1/4W 47K	1	
R6026		ERDS2TJ472	C.RESISTOR 1/4W 4.7K	1	
R6027		ERDS2TJ563	C.RESISTOR 1/4W 56K	1	
R6028		ERDS2TJ103	C.RESISTOR 1/4W 10K	1	
R6029		ERDS2TJ471	C.RESISTOR 1/4W 470	1	
R6030		ERDS2TJ563	C.RESISTOR 1/4W 56K	1	
R6031		ERDS2TJ103	C.RESISTOR 1/4W 10K	1	
R6032		ERDS2TJ472	C.RESISTOR 1/4W 4.7K	1	
R6033		ERDS2TJ473	C.RESISTOR 1/4W 47K	1	
R6034		ERDS2TJ472	C.RESISTOR 1/4W 4.7K	1	
R6035		ERDS2TJ563	C.RESISTOR 1/4W 56K	1	
R6036		ERDS2TJ103	C.RESISTOR 1/4W 10K	1	
R6037		ERDS2TJ471	C.RESISTOR 1/4W 470	1	
R6038		ERDS2TJ563	C.RESISTOR 1/4W 56K	1	
R6039		ERDS2TJ103	C.RESISTOR 1/4W 10K	1	
R6040		ERDS2TJ472	C.RESISTOR 1/4W 4.7K	1	
R6041		ERDS2TJ473	C.RESISTOR 1/4W 47K	1	
R6042		ERDS2TJ472	C.RESISTOR 1/4W 4.7K	1	
R6043		ERDS2TJ563	C.RESISTOR 1/4W 56K	1	
R6044		ERDS2TJ103	C.RESISTOR 1/4W 10K	1	
R6045		ERDS2TJ471	C.RESISTOR 1/4W 470	1	
R6046		ERDS2TJ563	C.RESISTOR 1/4W 56K	1	
R6047,48		ERG1ANJ101	M.RESISTOR 1W 100	2	
R6049		ERDS2TJ102	C.RESISTOR 1/4W 1K	1	
R6050		ERDS2TJ272	C.RESISTOR 1/4W 2.7K	1	
R6051		ERDS2TJ472	C.RESISTOR 1/4W 4.7K	1	
R6052-56		ERDS2TJ103	C.RESISTOR 1/4W 10K	5	
R6057		ERDS2TJ472	C.RESISTOR 1/4W 4.7K	1	
R6058		ERDS2TJ104	C.RESISTOR 1/4W 100K	1	
R6059		ERDS2T0	C.RESISTOR 1/4W 0	1	
R6062		ERDS2TJ103	C.RESISTOR 1/4W 10K	1	
R6063		ERQS2CKF2403	M.RESISTOR 1/4W 240K	1	
R6064		ERDS2T0	C.RESISTOR 1/4W 0	1	
R6066		ERDS2TJ103	C.RESISTOR 1/4W 10K	1	
R6068		ERQS2CKG8202	M.RESISTOR 1/4W 82K	1	
R6130		ERDS2TJ472	C.RESISTOR 1/4W 4.7K	1	
R6134		ERDS2TJ472	C.RESISTOR 1/4W 4.7K	1	
R6138		ERDS2TJ102	C.RESISTOR 1/4W 1K	1	
R6149		ERDS2TJ101	C.RESISTOR 1/4W 100	1	
R6150		ERDS2TJ562	C.RESISTOR 1/4W 5.6K	1	
R6151-53		ERDS2TJ103	C.RESISTOR 1/4W 10K	3	
R6154		ERDS2TJ563	C.RESISTOR 1/4W 56K	1	
R6155		ERDS2TJ103	C.RESISTOR 1/4W 10K	1	
R6156		ERDS2TJ563	C.RESISTOR 1/4W 56K	1	
R6157		ERDS2TJ562	C.RESISTOR 1/4W 5.6K	1	
R6158		ERDS2TJ102	C.RESISTOR 1/4W 1K	1	
RA6002,03		EXBP84103J	COMBI R-R	2	
RA6004		EXBP84473J	COMBI R-R	1	
VR6004		EVM31GA00B15	V.RESISTOR 100K	1	
X6001		VSX0128	CRYSTAL OSCILLATOR	1	<R>
			MISCELLANEOUS		
E70		VMP0903	SUPPORT	1	
E71		VSC1799	SHIELD PLATE	1	

Ref.No.		Part No.	Part Name & Description	Pcs	Remarks
	■	VEP06518B	INTERFACE C.B.A.		
C6201,02		ECCF1H330JC	C.CAPACITOR 50V 33P	2	
C6204		ECEA1HK010	E.CAPACITOR 50V 1U	1	
C6205		ECKF1H102KB	C.CAPACITOR 50V 1000P	1	
C6206		ECKF1H103ZF	C.CAPACITOR 50V 0.01U	1	
C6207		ECEA0JK470	E.CAPACITOR 6.3V 47U	1	
C6208		ECCF1H820JC	C.CAPACITOR 50V 82P	1	
C6213		ECEA1CK470U	E.CAPACITOR 16V 47U	1	
C6214		ECEA0JK470	E.CAPACITOR 6.3V 47U	1	
C6215		ECEA1EK4R7	E.CAPACITOR 25V 4.7U	1	
C6216		ECEA1VU470	E.CAPACITOR 35V 47U	1	
C6217		ECEA1HK3R3	E.CAPACITOR 50V 3.3U	1	
C6218		ECKF1H103ZF	C.CAPACITOR 50V 0.01U	1	
CA6201-05		EXFP8102ZW	C & C	5	
D6203		MA165	DIODE	1	<R>
IC6201		UPD7811G568	IC	1	<R>
IC6202		HD7406P	IC	1	<R>
IC6203		M51951BL	IC	1	<R>
L6201		VLQEL05F5R6K	COIL 5.6UH	1	
L6202		VLQ0067	COIL	1	
P6201		VJP1232T	CONNECTOR(MALE) 5P	1	
P6202		VJP1232G	CONNECTOR(MALE) 5P	1	
P6203		VJP1235T	CONNECTOR(MALE) 8P	1	
P6204		VJP1231T	CONNECTOR(MALE) 4P	1	
P6205		VJP1230T	CONNECTOR(MALE) 3P	1	
P6206		VJS1822	CONNECTOR(FEMALE) 3P	1	
P6207		VJP1232R	CONNECTOR(MALE) 5P	1	
P6208		VJP1229T	CONNECTOR(MALE) 2P	1	
P6209,10		VJP1229	CONNECTOR(MALE) 2P	2	
P6211		VJP1141	CONNECTOR(MALE) 2P	1	
Q6203		2SD636	TRANSISTOR	1	(Q,R)<R>
Q6205		2SD636	TRANSISTOR	1	(Q,R)<R>
QR6201,02		UN1211	TRANSISTOR-RESISTOR	2	<R>
QR6204-09		UN1211	TRANSISTOR-RESISTOR	6	<R>
QR6211		UN1211	TRANSISTOR-RESISTOR	1	<R>
QR6212		UN1114	TRANSISTOR-RESISTOR	1	<R>
QR6213,14		UN1213	TRANSISTOR-RESISTOR	2	<R>
R6201-20		ERDS2TJ103	C.RESISTOR 1/4W 10K	20	
R6221		ERDS2TJ272	C.RESISTOR 1/4W 2.7K	1	
R6222		ERDS2TJ103	C.RESISTOR 1/4W 10K	1	
R6227		ERDS2TJ150	C.RESISTOR 1/4W 15	1	
R6228		ERDS2TJ103	C.RESISTOR 1/4W 10K	1	

Ref.No.		Part No.	Part Name & Description	Pcs	Remarks
R6229		ERDS2TJ153	C.RESISTOR 1/4W 15K	1	
R6230		ERDS2TJ562	C.RESISTOR 1/4W 5.6K	1	
R6233-36		ERDS2TJ103	C.RESISTOR 1/4W 10K	4	
R6237		ERDS2TJ102	C.RESISTOR 1/4W 1K	1	
R6238		ERDS2TJ103	C.RESISTOR 1/4W 10K	1	
R6239		ERDS2TJ102	C.RESISTOR 1/4W 1K	1	
R6245		ERDS2TJ103	C.RESISTOR 1/4W 10K	1	
R6247		ERQ12HJ2R7	F.RESISTOR 1/2W 2.7	1	
R6268		ERDS2TJ105	C.RESISTOR 1/4W 1000K	1	
R6269		ERDS2TJ103	C.RESISTOR 1/4W 10K	1	
R6270		ERDS2TJ684	C.RESISTOR 1/4W 680K	1	
R6271		ERDS2TJ473	C.RESISTOR 1/4W 47K	1	
R6272-74		ERDS2TJ103	C.RESISTOR 1/4W 10K	3	
R6276		ERQ12HJ330	F.RESISTOR 1/2W 33	1	
R6277-79		ERDS2TJ103	C.RESISTOR 1/4W 10K	3	
RA6201		EXBP86103J	RESISTOR&RESISTOR 10K	1	
RA6202		EXBP88103J	COMBI R-R 10K	1	
RA6203		EXBP86103J	RESISTOR&RESISTOR 10K	1	
X6201		VSX0178	CRYSTAL OSCILLATOR	1	<R>
			MISCELLANEOUS		
E72		TJC6319	FUSE HOLDER	2	
E73		VSE0036	HOUR METER	1	
	■	VEP08132A	CHROMINCE C.B.A.		
C8015		ECKF1H103ZF	C.CAPACITOR 50V 0.01U	1	
C8016		ECEA0JK470	E.CAPACITOR 6.3V 47U	1	
C8017,18		ECKF1H103ZF	C.CAPACITOR 50V 0.01U	2	
C8019		ECEA0JK470	E.CAPACITOR 6.3V 47U	1	
C8020		ECEA1CK470U	E.CAPACITOR 16V 47U	1	
C8021-24		ECKF1H103ZF	C.CAPACITOR 50V 0.01U	4	
C8028		ECKF1H103ZF	C.CAPACITOR 50V 0.01U	1	
C8050		ECEA0JK101U	E.CAPACITOR 6.3V 100U	1	
C8051,52		ECKF1H103ZF	C.CAPACITOR 50V 0.01U	2	
C8053		ECEA1HK010	E.CAPACITOR 50V 1U	1	
C8054		ECQP1H102JZ	P.CAPACITOR 50V 1000P	1	
C8055		ECCF1H050DC	C.CAPACITOR 50V 5P	1	
C8056		ECCF1H820JC	C.CAPACITOR 50V 82P	1	
C8057		ECEA1HK010	E.CAPACITOR 50V 1U	1	
C8058		ECEA1HK4R7	E.CAPACITOR 50V 4.7U	1	
C8059,60		ECEA1HK2R2	E.CAPACITOR 50V 2.2U	2	
C8061		ECEA0JK101U	E.CAPACITOR 6.3V 100U	1	
C8062		ECQV1H154JZ	P.CAPACITOR 50V 0.15U	1	
C8063		ECQV1H474JZ	P.CAPACITOR 50V 0.47U	1	
C8064		ECCF1H101JC	C.CAPACITOR 50V 100P	1	
C8065		ECQV1H124JZ	P.CAPACITOR 50V 0.12U	1	
C8066		ECCF1H101JC	C.CAPACITOR 50V 100P	1	
C8067		ECEA0JK101U	E.CAPACITOR 6.3V 100U	1	
C8068		ECCF1H390JC	C.CAPACITOR 50V 39P	1	
C8084-87		ECKF1H103ZF	C.CAPACITOR 50V 0.01U	4	
C8089		ECKF1H103ZF	C.CAPACITOR 50V 0.01U	1	
C8090		ECEA1CK470U	E.CAPACITOR 16V 47U	1	
C8091		ECKF1H103ZF	C.CAPACITOR 50V 0.01U	1	
C8092		ECEA1CK470U	E.CAPACITOR 16V 47U	1	
C8093,94		ECKF1H103ZF	C.CAPACITOR 50V 0.01U	2	
C8101		ECQV1H104JZ	P.CAPACITOR 50V 0.1U	1	
C8102		ECKF1H332KB	C.CAPACITOR 50V 3300P	1	
C8103		ECKF1H103ZF	C.CAPACITOR 50V 0.01U	1	
C8104		ECQV1H104JZ	P.CAPACITOR 50V 0.1U	1	
C8105		ECKF1H103ZF	C.CAPACITOR 50V 0.01U	1	

Ref.No.		Part No.	Part Name & Description	Pcs	Remarks
C8106		ECQV1H104JZ	P.CAPACITOR 50V 0.1U	1	
C8107		ECKF1H103ZF	C.CAPACITOR 50V 0.01U	1	
C8108		ECEA1CK470U	E.CAPACITOR 16V 47U	1	
C8109-11		ECKF1H103ZF	C.CAPACITOR 50V 0.01U	3	
C8112		ECEA1CK470U	E.CAPACITOR 16V 47U	1	
C8126		ECKF1H103ZF	C.CAPACITOR 50V 0.01U	1	
C8127		ECEA1CU221	E.CAPACITOR 16V 220U	1	
C8128		ECEA1CN101S	E.CAPACITOR 16V 100U	1	
C8129-31		ECKF1H103ZF	C.CAPACITOR 50V 0.01U	3	
C8132		ECEA1CK100	E.CAPACITOR 16V 10U	1	
C8133		ECEA1HK010	E.CAPACITOR 50V 1U	1	
C8134,35		ECKF1H271KB	C.CAPACITOR 50V 270P	2	
C8136		ECEA1HK010	E.CAPACITOR 50V 1U	1	
C8137		ECQV1H104JZ	P.CAPACITOR 50V 0.1U	1	
C8138		ECEA1HKN010	E.CAPACITOR 50V 1U	1	
C8139		ECQV1H104JZ	P.CAPACITOR 50V 0.1U	1	
C8140		ECKF1H103ZF	C.CAPACITOR 50V 0.01U	1	
C8141		ECEA1CK470U	E.CAPACITOR 16V 47U	1	
C8142		ECKF1H103ZF	C.CAPACITOR 50V 0.01U	1	
C8145,46		ECQV1H104JZ	P.CAPACITOR 50V 0.1U	2	
C8147		ECKF1H103ZF	C.CAPACITOR 50V 0.01U	1	
C8156		ECEA1EK4R7	E.CAPACITOR 25V 4.7U	1	
C8157		ECQM1H102JV	P.CAPACITOR 50V 1000P	1	
C8158		ECQM1H392JV	P.CAPACITOR 50V 3900P	1	
C8159		ECCF1H390JC	C.CAPACITOR 50V 39P	1	
C8162		ECCF1H270JC	C.CAPACITOR 50V 27P	1	
C8165		ECEA0JK101U	E.CAPACITOR 6.3V 100U	1	
C8166,67		ECKF1H103ZF	C.CAPACITOR 50V 0.01U	2	
C8182		ECKF1H103ZF	C.CAPACITOR 50V 0.01U	1	
C8188		ECKF1H103ZF	C.CAPACITOR 50V 0.01U	1	
C8189		ECKF1H102KB	C.CAPACITOR 50V 1000P	1	
C8191		ECKF1H103ZF	C.CAPACITOR 50V 0.01U	1	
C8193		ECQP1H102JZ	P.CAPACITOR 50V 1000P	1	
D8006		MA165	DIODE	1	<R>
D8010		MA165	DIODE	1	<R>
DL8001		VLD0154	DELAY LINE	1	<R>
DL8002		EFDHR124A13A	DELAY LINE	1	<R>
DL8008		VLD0032	DELAY LINE	1	<R>
DL8011		VLD0032	DELAY LINE	1	<R>
FL8002		VLF0299	FILTER	1	
IC8005		MN4053B	IC	1	<R>
IC8008		VEFH04A	HIC	1	<R>
IC8015		AN614	IC	1	<R>
IC8016		AN608P	IC	1	<R>
IC8017		MN74HC221	IC	1	<R>
IC8018		MN4053B	IC	1	<R>
L8003,04		VLQEL05F121K	COIL 120UH	2	
L8005		VLQEL05F101K	COIL 100UH	1	
L8009		VLQEL05F121K	COIL 120UH	1	
L8012		VLQEL05F121K	COIL 120UH	1	
L8013		VLQEL05F470K	COIL 47UH	1	
L8014		VLQEL05F121K	COIL 120UH	1	
L8015		VLQEL05F150K	COIL 15UH	1	
L8016		VLQEL05F331K	COIL 330UH	1	
L8017		VLQEL05R271J	COIL 270UH	1	
L8018		VLQEL05F121K	COIL 120UH	1	
L8019		VLQEL05F390K	COIL 39UH	1	
L8020		VLQEL05F470K	COIL 47UH	1	
L8023,24		VLQEL05F101K	COIL 100UH	2	
L8026,27		VLQEL05F101K	COIL 100UH	2	

Ref.No.		Part No.	Part Name & Description	Pcs	Remarks
L8030,31		VLQEL05F101K	COIL 100UH	2	
L8032		VLQEL05F471K	COIL 470UH	1	
L8034		VLQEL05F681K	COIL 680UH	1	
L8036		VLQEL05F270K	COIL 27UH	1	
L8037		VLQEL05F121K	COIL 120UH	1	
P8003		VJP1233T	CONNECTOR(MALE) 6P	1	
P8004		VJP1237T	CONNECTOR(MALE) 10P	1	
P8005		VJP1231T	CONNECTOR(MALE) 4P	1	
P8006		VJP1230T	CONNECTOR(MALE) 3P	1	
P8007		VJP1232G	CONNECTOR(MALE) 5P	1	
P8008		VJP1232R	CONNECTOR(MALE) 5P	1	
P8009		VJP1232T	CONNECTOR(MALE) 5P	1	
P8010		VJP1229T	CONNECTOR(MALE) 2P	1	
P8011		VJP1229	CONNECTOR(MALE) 2P	1	
Q8004		2SD636	TRANSISTOR	1	(Q,R)<R>
Q8008,09		2SD636	TRANSISTOR	2	(Q,R)<R>
Q8019		2SD636	TRANSISTOR	1	(Q,R)<R>
Q8020		2SB641	TRANSISTOR	1	(Q,R)<R>
Q8023		2SK301P	TRANSISTOR	1	<R>
Q8024		2SB641	TRANSISTOR	1	(Q,R)<R>
Q8025-30		2SD636	TRANSISTOR	6	(Q,R)<R>
Q8032,33		2SD636	TRANSISTOR	2	(Q,R)<R>
Q8036		2SD636	TRANSISTOR	1	(Q,R)<R>
QR8001-04		UN1212	TRANSISTOR-RESISTOR	4	<R>
QR8007,08		UN1212	TRANSISTOR-RESISTOR	2	<R>
QR8014		UN1213	TRANSISTOR-RESISTOR	1	<R>
R8015		ERDS2TJ103	C.RESISTOR 1/4W 10K	1	
R8016		ERDS2TJ472	C.RESISTOR 1/4W 4.7K	1	
R8017		ERDS2TJ103	C.RESISTOR 1/4W 10K	1	
R8019		ERDS2TJ822	C.RESISTOR 1/4W 8.2K	1	
R8020		ERDS2TJ103	C.RESISTOR 1/4W 10K	1	
R8023		ERDS2TJ222	C.RESISTOR 1/4W 2.2K	1	
R8024		ERDS2TJ103	C.RESISTOR 1/4W 10K	1	
R8025		ERDS2TJ473	C.RESISTOR 1/4W 47K	1	
R8027,28		ERDS2TJ103	C.RESISTOR 1/4W 10K	2	
R8029		ERDS2TJ561	C.RESISTOR 1/4W 560	1	
R8030		ERDS2TJ101	C.RESISTOR 1/4W 100	1	
R8031		ERDS2TJ330	C.RESISTOR 1/4W 33	1	
R8032-34		ERDS2TJ152	C.RESISTOR 1/4W 1.5K	3	
R8048		ERDS2TJ103	C.RESISTOR 1/4W 10K	1	
R8049		ERDS2TJ333	C.RESISTOR 1/4W 33K	1	
R8050		ERDS2TJ561	C.RESISTOR 1/4W 560	1	
R8051		ERDS2TJ103	C.RESISTOR 1/4W 10K	1	
R8052		ERDS2TJ182	C.RESISTOR 1/4W 1.8K	1	
R8053		ERDS2TJ152	C.RESISTOR 1/4W 1.5K	1	
R8054		ERDS2TJ563	C.RESISTOR 1/4W 56K	1	
R8055		ERDS2TJ562	C.RESISTOR 1/4W 5.6K	1	
R8056		ERDS2TJ103	C.RESISTOR 1/4W 10K	1	
R8057		ERDS2TJ271	C.RESISTOR 1/4W 270	1	
R8058,59		ERDS2TJ102	C.RESISTOR 1/4W 1K	2	
R8068		ERDS2TJ103	C.RESISTOR 1/4W 10K	1	
R8085		ERDS2TJ102	C.RESISTOR 1/4W 1K	1	
R8088		ERQ12HJ330	F.RESISTOR 1/2W 33	1	
R8101,02		ERDS2TJ102	C.RESISTOR 1/4W 1K	2	
R8103		ERDS2TJ681	C.RESISTOR 1/4W 680	1	
R8104		ERDS2TJ561	C.RESISTOR 1/4W 560	1	
R8105		ERDS2TJ153	C.RESISTOR 1/4W 15K	1	
R8106		ERDS2TJ562	C.RESISTOR 1/4W 5.6K	1	
R8107		ERDS2TJ103	C.RESISTOR 1/4W 10K	1	
R8108		ERDS2TJ561	C.RESISTOR 1/4W 560	1	
R8109		ERDS2TJ102	C.RESISTOR 1/4W 1K	1	
R8110		ERDS2TJ562	C.RESISTOR 1/4W 5.6K	1	
R8111		ERDS2TJ153	C.RESISTOR 1/4W 15K	1	

Ref.No.		Part No.	Part Name & Description	Pcs	Remarks
R8112		ERDS2TJ102	C.RESISTOR 1/4W 1K	1	
R8113		ERDS2TJ471	C.RESISTOR 1/4W 470	1	
R8123		ERDS2TJ101	C.RESISTOR 1/4W 100	1	
R8124		ERDS2TJ102	C.RESISTOR 1/4W 1K	1	
R8125		ERDS2TJ153	C.RESISTOR 1/4W 15K	1	
R8126		ERDS2TJ562	C.RESISTOR 1/4W 5.6K	1	
R8127		ERDS2TJ102	C.RESISTOR 1/4W 1K	1	
R8128,29		ERDS2TJ561	C.RESISTOR 1/4W 560	2	
R8130		ERDS2TJ102	C.RESISTOR 1/4W 1K	1	
R8131		ERDS2TJ222	C.RESISTOR 1/4W 2.2K	1	
R8132		ERDS2TJ153	C.RESISTOR 1/4W 15K	1	
R8133		ERDS2TJ562	C.RESISTOR 1/4W 5.6K	1	
R8134,35		ERDS2TJ561	C.RESISTOR 1/4W 560	2	
R8136		ERDS2TJ102	C.RESISTOR 1/4W 1K	1	
R8137		ERDS2TJ333	C.RESISTOR 1/4W 33K	1	
R8138,39		ERDS2TJ223	C.RESISTOR 1/4W 22K	2	
R8140		ERDS2TJ561	C.RESISTOR 1/4W 560	1	
R8141		ERDS2TJ330	C.RESISTOR 1/4W 33	1	
R8155		ERDS2TJ103	C.RESISTOR 1/4W 10K	1	
R8156		ERDS2TJ392	C.RESISTOR 1/4W 3.9K	1	
R8157		ERDS2TJ561	C.RESISTOR 1/4W 560	1	
R8158		ERDS2TJ101	C.RESISTOR 1/4W 100	1	
R8159		ERDS2TJ103	C.RESISTOR 1/4W 10K	1	
R8160		ERDS2TJ222	C.RESISTOR 1/4W 2.2K	1	
R8161		ERDS2TJ221	C.RESISTOR 1/4W 220	1	
R8162		ERDS2TJ222	C.RESISTOR 1/4W 2.2K	1	
R8163		ERDS2TJ103	C.RESISTOR 1/4W 10K	1	
R8164		ERDS2TJ472	C.RESISTOR 1/4W 4.7K	1	
R8165		ERDS2TJ152	C.RESISTOR 1/4W 1.5K	1	
R8166,67		ERDS2TJ102	C.RESISTOR 1/4W 1K	2	
R8168		ERDS2TJ101	C.RESISTOR 1/4W 100	1	
R8169,70		ERDS2TJ332	C.RESISTOR 1/4W 3.3K	2	
R8171		ERDS2TJ222	C.RESISTOR 1/4W 2.2K	1	
R8172,73		ERDS2TJ101	C.RESISTOR 1/4W 100	2	
R8186,87		ERDS2TJ103	C.RESISTOR 1/4W 10K	2	
R8188		ERDS2TJ152	C.RESISTOR 1/4W 1.5K	1	
R8189		ERDS2TJ103	C.RESISTOR 1/4W 10K	1	
R8190		ERDS2TJ393	C.RESISTOR 1/4W 39K	1	
R8206		ERDS2TJ103	C.RESISTOR 1/4W 10K	1	
R8207		ERDS2TJ223	C.RESISTOR 1/4W 22K	1	
R8214,15		ERDS2TJ333	C.RESISTOR 1/4W 33K	2	
R8216		ERDS2TJ102	C.RESISTOR 1/4W 1K	1	
R8217		ERDS2TJ101	C.RESISTOR 1/4W 100	1	
R8222		ERDS2TJ750	C.RESISTOR 1/4W 75	1	
TH8001		ERTD2FHL102S	THERMISTOR 1K	1	
VR8004,05		EVM31GA00B23	V.RESISTOR 2K	2	
VR8007		EVM31GA00B24	V.RESISTOR 20K	1	
X8002		VSX0162	CRYSTAL OSCILLATOR	1	<R>
			MISCELLANEOUS		
E81		VMP0905	SUPPORT	1	
	■	VEP00L96B	POKET SW CONNECTION C.B.A.		
P6651		VJP1235T	CONNECTOR(MALE) 8P	1	
P6652		VJP1230T	CONNECTOR(MALE) 3P	1	
P6654		VJP1230R	CONNECTOR(MALE) 3P	1	

Ref.No.		Part No.	Part Name & Description	Pcs	Remarks
	■	VEP04257B	NORMAL AUDIO C.B.A.		INCLUDING THE
					SUB AUDIO PACK (1)
					C.B.A. (VEP04133B)
					SUB AUDIO PACK (2)
					C.B.A. (VEP04319D)
					TIME CODE PACK
					C.B.A. (VEP00G62A)
C1		ECEA1EKS4R7	E.CAPACITOR 25V 4.7U	1	
C2		ECEA1CK101	E.CAPACITOR 16V 100U	1	
C3,C4		ECEA1HKN010	E.CAPACITOR 50V 1U	2	
C6		ECUM1H561KBN	C.CAPACITOR CH 50V 560P	1	
C7		ECEA0JK101	E.CAPACITOR 6.3V 100U	1	
C8,C9		ECEA1CKS330	E.CAPACITOR 16V 33U	2	
C401		ECEA1VPZ101	E.CAPACITOR 35V 100U	1	
C402		ECQV1H473JZ	P.CAPACITOR 50V 0.047U	1	
C403		ECEA1CPZ100	E.CAPACITOR 16V 10U	1	
C404		ECQV1H104JZ	P.CAPACITOR 50V 0.1U	1	
C405		ECQV1H334JZ	P.CAPACITOR 50V 0.33U	1	
C406		ECEA0JPK221	E.CAPACITOR 6.3V 220U	1	
C407		ECQB1H472JZ	P.CAPACITOR 50V 4700P	1	
C408,09		ECEA1CPZ100	E.CAPACITOR 16V 10U	2	
C410		ECQB1H472JZ	P.CAPACITOR 50V 4700P	1	
C411		ECQB1H562JZ	P.CAPACITOR 50V 5600P	1	
C412		ECQB1H273JZ	P.CAPACITOR 50V 0.027U	1	
C413		ECEA1CBZ100	E.CAPACITOR 16V 10U	1	
C414		ECEA1HPZ010	E.CAPACITOR 50V 1U	1	
C415,16		ECEA1CPZ100	E.CAPACITOR 16V 10U	2	
C417		ECEA1EPZ221	E.CAPACITOR 25V 220U	1	
C418		ECEA1EPZ471	E.CAPACITOR 25V 470U	1	
C419		ECEA1HBZ010	E.CAPACITOR 50V 1U	1	
C420		ECEA1OM33	E.CAPACITOR 10V 33U	1	
C421		ECEA1CPK101	E.CAPACITOR 16V 100U	1	
C422		ECQB1H223JZ	P.CAPACITOR 50V 0.022U	1	
C423		ECEA1HPZ2R2	E.CAPACITOR 50V 2.2U	1	
C424		ECEA1HP24R7	E.CAPACITOR 50V 4.7U	1	
C425		ECUM1H561KBN	C.CAPACITOR CH 50V 560P	1	
C426		ECQV1H393JZ	P.CAPACITOR 50V 0.039U	1	
C427		ECEA50M1	E.CAPACITOR 50V 1U	1	
C428		ECEA1OM33	E.CAPACITOR 10V 33U	1	
C429		ECEA50ZR47	E.CAPACITOR 50V 0.47U	1	
C430		ECEA25Z4R7	E.CAPACITOR 25V 4.7U	1	
C431,32		ECUM1H102KBN	C.CAPACITOR CH 50V 1000P	2	
C433		ECUM1H471KBN	C.CAPACITOR CH 50V 470P	1	
C434,35		ECUM1H102KBN	C.CAPACITOR CH 50V 1000P	2	
C436		ECEA1HPZ010	E.CAPACITOR 50V 1U	1	
C437		ECEA1CPZ100	E.CAPACITOR 16V 10U	1	
C438		ECQB1H273JZ	P.CAPACITOR 50V 0.027U	1	
C451		ECEA1CPZ100	E.CAPACITOR 16V 10U	1	
C452		ECEA1CKS100	E.CAPACITOR 16V 10U	1	
C453-55		ECEA1CPZ100	E.CAPACITOR 16V 10U	3	
C458		ECEA1CKS100	E.CAPACITOR 16V 10U	1	
C459,60		ECEA1VPZ470	E.CAPACITOR 35V 47U	2	
C461		ECEA1CPZ100	E.CAPACITOR 16V 10U	1	
C463		ECEA1CU220	E.CAPACITOR 16V 22U	1	
C464		ECEA1CPZ100	E.CAPACITOR 16V 10U	1	
C465		ECEA1CKS100	E.CAPACITOR 16V 10U	1	
C4001		ECEA1CK101	E.CAPACITOR 16V 100U	1	
C4002		ECEA1CK220	E.CAPACITOR 16V 22U	1	
C4004		ECEA1CK100	E.CAPACITOR 16V 10U	1	
C4020		ECEA1CK101	E.CAPACITOR 16V 100U	1	
C4022		ECEA1CK100	E.CAPACITOR 16V 10U	1	
C4024		ECEA1CK101	E.CAPACITOR 16V 100U	1	
C4025		ECEA1CK330U	E.CAPACITOR 16V 33U	1	
C4026		ECEA1HK010	E.CAPACITOR 50V 1U	1	
C4027		ECKF1H102KB	C.CAPACITOR 50V 1000P	1	
C4028		ECEA1CK101	E.CAPACITOR 16V 100U	1	
C4029		ECQB1H822JH	P.CAPACITOR 50V 8200P	1	
C4030		ECCF1H330KC	C.CAPACITOR 50V 33P	1	

Ref.No.		Part No.	Part Name & Description	Pcs	Remarks
C4072-75		ECEA1CPZ100	E.CAPACITOR 16V 10U	4	
C4076		ECEA1CPZ470	E.CAPACITOR 16V 47U	1	
C4080		ECEA1CK470U	E.CAPACITOR 16V 47U	1	
C4089,90		ECEA1CK100	E.CAPACITOR 16V 10U	2	
C4091,92		ECEA1EK4R7	E.CAPACITOR 25V 4.7U	2	
C4098		ECEA1CK100	E.CAPACITOR 16V 10U	1	
C4099,00		ECEA1CPZ470	E.CAPACITOR 16V 47U	2	
C4101		ECEA1CK470U	E.CAPACITOR 16V 47U	1	
C4108		ECQB1H152JH	P.CAPACITOR 50V 1500P	1	
D401		MA151WK	DIODE	1	<R>
D402		MA165	DIODE	1	<R>
D403		MA151WK	DIODE	1	<R>
D404-07		MA165	DIODE	4	<R>
D408		MA151K	DIODE	1	<R>
D409-12		MA165	DIODE	4	<R>
D4001,02		MA165	DIODE	2	<R>
D4011		MA165	DIODE	1	<R>
D4014		MA165	DIODE	1	<R>
D4015-18		OA90	DIODE	4	<R>
D4019,20		MA165	DIODE	2	<R>
D4022		MA165	DIODE	1	<R>
D4025,26		MA4043	DIODE	2	<R>
IC1		AN6912	IC	1	<R>
IC401		NE646N	IC	1	<R>
IC402		HA12005	IC	1	<R>
IC451-53		UPC4558C	IC	3	<R>
IC454		UPD4066BC	IC	1	<R>
IC4004		AN360	IC	1	<R>
IC4005		UPD4066BC	IC	1	<R>
IC4006		UPC4558C	IC	1	<R>
IC4007,08		UPD4066BC	IC	2	<R>
IC4009		UPC4558C	IC	1	<R>
IC4011		UPC4558C	IC	1	<R>
L401		VLF0402	FILTER	1	
L4009		VLQEL05F471K	COIL 470UH	1	
L4010		VLQEL05F221K	COIL 220UH	1	
L4011		VLQEL05F102K	COIL 1000UH	1	
P4001		VJP1236T	CONNECTOR(MALE) 9P	1	
P4002		VJP1235T	CONNECTOR(MALE) 8P	1	
P4003		VJP1229T	CONNECTOR(MALE) 2P	1	
P4004		VJP1233G	CONNECTOR(MALE) 6P	1	
P4005		VJP1231T	CONNECTOR(MALE) 4P	1	
P4008		VJP1230R	CONNECTOR(MALE) 3P	1	
P4009		VJP1229	CONNECTOR(MALE) 2P	1	
P4010		VJP1230R	CONNECTOR(MALE) 3P	1	
P4011,12		VJP1230T	CONNECTOR(MALE) 3P	2	
P4013		VJP1231G	CONNECTOR(MALE) 4P	1	
P4051		VJP1235R	CONNECTOR(MALE) 8P	1	
P4057		VJP1231B	CONNECTOR(MALE) 4P	1	
P4058		VJP1236T	CONNECTOR(MALE) 9P	1	
P4059		VJP1231G	CONNECTOR(MALE) 4P	1	
P4060		VJP1231T	CONNECTOR(MALE) 4P	1	
P4061		VJP1230T	CONNECTOR(MALE) 3P	1	
P4062		VJP1230G	CONNECTOR(MALE) 3P	1	
Q1,Q2		2SD601	TRANSISTOR CHIP	2	(Q,R)<R>
Q401,02		2SD601	TRANSISTOR CHIP	2	(Q,R)<R>
Q403		2SB710	TRANSISTOR	1	(Q,R,T,W)<R>
Q404		2SD601	TRANSISTOR CHIP	1	(Q,R)<R>
Q405		2SD1328	TRANSISTOR	1	<R>
Q4001		2SB641	TRANSISTOR	1	(Q,R)<R>

Ref.No.	Part No.	Part Name & Description	Pcs	Remarks
Q4024	2SB643	TRANSISTOR	1	(Q,R)<R>
QR1	UN2211	TRANSISTOR-RESISTOR	1	<R>
QR401	UN2211	TRANSISTOR-RESISTOR	1	<R>
QR402	UN2111	TRANSISTOR-RESISTOR	1	<R>
QR403	UN2213	TRANSISTOR-RESISTOR	1	<R>
QR405	UN2111	TRANSISTOR-RESISTOR	1	<R>
QR406	UN2213	TRANSISTOR-RESISTOR	1	<R>
QR407	UN2111	TRANSISTOR-RESISTOR	1	<R>
QR4007-09	UN1213	TRANSISTOR-RESISTOR	3	<R>
QR4013	UN1111	TRANSISTOR-RESISTOR	1	<R>
QR4015	DTC144WA	TRANSISTOR RESISTOR	1	<R>
QR4016	UN1211	TRANSISTOR-RESISTOR	1	<R>
R01	ERJ6GEYJ563	M.RESISTOR CH 1/10W 56K	1	
R02,03	ERJ6GEYJ223	M.RESISTOR CH 1/10W 22K	2	
R04	ERJ6GEYJ102	M.RESISTOR CH 1/10W 1K	1	
R05	ERJ6GEYJ122	M.RESISTOR CH 1/10W 1.2K	1	
R06	ERJ6GEYJ563	M.RESISTOR CH 1/10W 56K	1	
R07	ERJ6GEYJ223	M.RESISTOR CH 1/10W 22K	1	
R08	ERJ6GEYJ102	M.RESISTOR CH 1/10W 1K	1	
R09	ERJ6GEYJ474	M.RESISTOR CH 1/10W 470K	1	
R10	ERJ6GEYJ104	M.RESISTOR CH 1/10W 100K	1	
R11	ERJ6GEYJ333	M.RESISTOR CH 1/10W 33K	1	
R12	ERJ6GEYJ562	M.RESISTOR CH 1/10W 5.6K	1	
R13	ERJ6GEYJ332	M.RESISTOR CH 1/10W 3.3K	1	
R14	ERJ6GEYJ103	M.RESISTOR CH 1/10W 10K	1	
R15	ERJ6GEYJ821	M.RESISTOR CH 1/10W 820	1	
R16	ERJ6GEYJ560	M.RESISTOR CH 1/10W 56	1	
R17	ERJ6GEYJ103	M.RESISTOR CH 1/10W 10K	1	
R18	ERJ6GEYJ105	M.RESISTOR CH 1/10W 1M	1	
R19	ERJ6GEYJ332	M.RESISTOR CH 1/10W 3.3K	1	
R20	ERJ6GEYJ103	M.RESISTOR CH 1/10W 10K	1	
R21	ERJ6GEYJ105	M.RESISTOR CH 1/10W 1M	1	
R22	ERJ6GEYJ332	M.RESISTOR CH 1/10W 3.3K	1	
R23,24	ERJ6GEYJ223	M.RESISTOR CH 1/10W 22K	2	
R25,26	ERJ6GEYJ103	M.RESISTOR CH 1/10W 10K	2	
R27	ERJ6GEYJ332	M.RESISTOR CH 1/10W 3.3K	1	
R28	ERJ6GEYJ223	M.RESISTOR CH 1/10W 22K	1	
R29	ERJ6GEYJ564	M.RESISTOR CH 1/10W 560K	1	
R30,31	ERJ6GEYJ103	M.RESISTOR CH 1/10W 10K	2	
R401	ERJ6GEYJ682	M.RESISTOR CH 1/10W 6.8K	1	
R402	ERJ6GEYJ154	M.RESISTOR CH 1/10W 150K	1	
R403	ERJ6GEYJ682	M.RESISTOR CH 1/10W 6.8K	1	
R404	ERJ6GEYJ221	M.RESISTOR CH 1/10W 220	1	
R405	ERJ6GEYJ104	M.RESISTOR CH 1/10W 100K	1	
R406	ERJ6GEYJ562	M.RESISTOR CH 1/10W 5.6K	1	
R407,08	ERJ6GEYJ103	M.RESISTOR CH 1/10W 10K	2	
R409	ERJ6GEYJ393	M.RESISTOR CH 1/10W 39K	1	
R410,11	ERJ6GEYJ562	M.RESISTOR CH 1/10W 5.6K	2	
R412	ERJ6GEYJ393	M.RESISTOR CH 1/10W 39K	1	
R413	ERJ6GEYJ224	M.RESISTOR CH 1/10W 220K	1	
R414	ERJ6GEYJ105	M.RESISTOR CH 1/10W 1M	1	
R415	ERJ6GEYJ102	M.RESISTOR CH 1/10W 1K	1	
R416	ERJ6GEYJ222	M.RESISTOR CH 1/10W 2.2K	1	
R417	ERJ6GEYJ472	M.RESISTOR CH 1/10W 4.7K	1	
R418	ERJ6GEYJ104	M.RESISTOR CH 1/10W 100K	1	
R419	ERJ6GEYJ331	M.RESISTOR CH 1/10W 330	1	
R420	ERJ6GEYJ104	M.RESISTOR CH 1/10W 100K	1	
R421	ERJ6GEYJ824	M.RESISTOR CH 1/10W 820K	1	
R422	ERJ6GEYJ561	M.RESISTOR CH 1/10W 560	1	
R423	ERJ6GEYJ182	M.RESISTOR CH 1/10W 1.8K	1	
R424	ERJ6GEYJ333	M.RESISTOR CH 1/10W 33K	1	
R425	ERJ6GEYJ103	M.RESISTOR CH 1/10W 10K	1	
R426	ERJ6GEYJ181	M.RESISTOR CH 1/10W 180	1	
R427	ERJ6GEYJ473	M.RESISTOR CH 1/10W 47K	1	
R428	ERJ6GEYJ332	M.RESISTOR CH 1/10W 3.3K	1	
R429-31	ERJ6GEYJ102	M.RESISTOR CH 1/10W 1K	3	
R432	ERJ6GEYJ104	M.RESISTOR CH 1/10W 100K	1	
R433	ERJ6GEYJ184	M.RESISTOR CH 1/10W 180K	1	
R434	ERJ6GEYJ274	M.RESISTOR CH 1/10W 270K	1	

Ref.No.	Part No.	Part Name & Description	Pcs	Remarks
R435	ERJ6GEYJ104	M.RESISTOR CH 1/10W 100K	1	
R436	ERJ6GEYJ102	M.RESISTOR CH 1/10W 1K	1	
R437,38	ERJ6GEYJ472	M.RESISTOR CH 1/10W 4.7K	2	
R439	ERJ6GEYJ562	M.RESISTOR CH 1/10W 5.6K	1	
R440	ERJ6GEYJ822	M.RESISTOR CH 1/10W 8.2K	1	
R441	ERJ6GEYJ103	M.RESISTOR CH 1/10W 10K	1	
R442	ERJ6GEYJ562	M.RESISTOR CH 1/10W 5.6K	1	
R451	ERJ6GEYJ104	M.RESISTOR CH 1/10W 100K	1	
R452	ERJ6GEYJ561	M.RESISTOR CH 1/10W 560	1	
R453	ERJ6GEYJ331	M.RESISTOR CH 1/10W 330	1	
R454	ERDS2TJ562	C.RESISTOR 1/4W 5.6K	1	
R455	ERJ6GEYJ272	M.RESISTOR CH 1/10W 2.7K	1	
R456,57	ERJ6GEYJ102	M.RESISTOR CH 1/10W 1K	2	
R458-60	ERJ6GEYJ104	M.RESISTOR CH 1/10W 100K	3	
R462,63	ERJ6GEYJ103	M.RESISTOR CH 1/10W 10K	2	
R464	ERJ6GEYJ272	M.RESISTOR CH 1/10W 2.7K	1	
R465,66	ERJ6GEYJ104	M.RESISTOR CH 1/10W 100K	2	
R467	ERDS2TJ562	C.RESISTOR 1/4W 5.6K	1	
R475	ERDS2TJ562	C.RESISTOR 1/4W 5.6K	1	
R476	ERJ6GEYJ272	M.RESISTOR CH 1/10W 2.7K	1	
R477	ERDS2TJ562	C.RESISTOR 1/4W 5.6K	1	
R478	ERJ6GEYJ272	M.RESISTOR CH 1/10W 2.7K	1	
R4001	ERDS2TJ563	C.RESISTOR 1/4W 56K	1	
R4002	ERDS2TJ104	C.RESISTOR 1/4W 100K	1	
R4006	ERDS2TJ104	C.RESISTOR 1/4W 100K	1	
R4007	ERDS2TJ123	C.RESISTOR 1/4W 12K	1	
R4008	ERDS2TJ103	C.RESISTOR 1/4W 10K	1	
R4010	ERDS2TJ103	C.RESISTOR 1/4W 10K	1	
R4019	ERDS2TJ104	C.RESISTOR 1/4W 100K	1	
R4029	ERDS2TJ183	C.RESISTOR 1/4W 18K	1	
R4030	ERDS2TJ822	C.RESISTOR 1/4W 8.2K	1	
R4035	ERDS2TJ332	C.RESISTOR 1/4W 3.3K	1	
R4037	ERDS2TJ102	C.RESISTOR 1/4W 1K	1	
R4038	ERDS2TJ472	C.RESISTOR 1/4W 4.7K	1	
R4039	ERDS2TJ563	C.RESISTOR 1/4W 56K	1	
R4040	ERDS2TJ560	C.RESISTOR 1/4W 56	1	
R4041	ERDS2TJ121	C.RESISTOR 1/4W 120	1	
R4090	ERDS2TJ392	C.RESISTOR 1/4W 3.9K	1	
R4091	ERDS2TJ332	C.RESISTOR 1/4W 3.3K	1	
R4092	ERDS2TJ392	C.RESISTOR 1/4W 3.9K	1	
R4093	ERDS2TJ332	C.RESISTOR 1/4W 3.3K	1	
R4094-99	ERDS2TJ103	C.RESISTOR 1/4W 10K	6	
R4100	ERDS2TJ104	C.RESISTOR 1/4W 100K	1	
R4101	ERDS2TJ103	C.RESISTOR 1/4W 10K	1	
R4102	ERDS2TJ104	C.RESISTOR 1/4W 100K	1	
R4103	ERDS2TJ473	C.RESISTOR 1/4W 47K	1	
R4115	ERDS2TJ123	C.RESISTOR 1/4W 12K	1	
R4123,24	ERDS2TJ103	C.RESISTOR 1/4W 10K	2	
R4125	ERDS2TJ473	C.RESISTOR 1/4W 47K	1	
R4127	ERDS2TJ222	C.RESISTOR 1/4W 2.2K	1	
R4129	ERDS2TJ222	C.RESISTOR 1/4W 2.2K	1	
R4132	ERDS2TJ223	C.RESISTOR 1/4W 22K	1	
R4133	ERDS2TJ563	C.RESISTOR 1/4W 56K	1	
R4134-36	ERDS2TJ2R2	C.RESISTOR 1/4W 2.2	3	
R4137,38	ERDS2TJ102	C.RESISTOR 1/4W 1K	2	
R4139	ERDS2TJ2R2	C.RESISTOR 1/4W 2.2	1	
R4157	ERDS2TJ102	C.RESISTOR 1/4W 1K	1	
R4158,59	ERDS2TJ473	C.RESISTOR 1/4W 47K	2	
RY4001	VSY2035	RELAY	1	<R>
VR4001	EVN38CA00B53	V.RESISTOR 5K	1	
VR4002	EVN38CA00B24	V.RESISTOR 20K	1	
VR4004	EVN38CA00B53	V.RESISTOR 5K	1	
VR4005	EVN38CA00B24	V.RESISTOR 20K	1	
VR4007	EVN38CA00B53	V.RESISTOR 5K	1	
VR4009,10	EVN38CA00B53	V.RESISTOR 5K	2	
		MISCELLANEOUS		

Ref.No.		Part No.	Part Name & Description	Pcs	Remarks
E59		VMP0902	SUPPORT	1	
	■	VEP04269A	AUDIO JACK C.B.A.		
C4516		ECEA1VPZ470	E.CAPACITOR 35V 47U	1	
C4517		ECEA1VPZ101	E.CAPACITOR 35V 100U	1	
C4518		ECEA1VPZ470	E.CAPACITOR 35V 47U	1	
C4519		ECEA1VPZ101	E.CAPACITOR 35V 100U	1	
C4520		ECEA1CBZ100	E.CAPACITOR 16V 10U	1	
C4521,22		ECEA1VPZ470	E.CAPACITOR 35V 47U	2	
C4523		ECEA1CBZ100	E.CAPACITOR 16V 10U	1	
C4524,25		ECEA1VPZ470	E.CAPACITOR 35V 47U	2	
C4526		ECEA1CBZ100	E.CAPACITOR 16V 10U	1	
C4527,28		ECEA1VPZ470	E.CAPACITOR 35V 47U	2	
C4529		ECEA1CBZ100	E.CAPACITOR 16V 10U	1	
C4530,31		ECEA1VPZ470	E.CAPACITOR 35V 47U	2	
C4532,33		ECEA1CPZ100	E.CAPACITOR 16V 10U	2	
C4534		ECEA1CK101	E.CAPACITOR 16V 100U	1	
C4535		ECEA1CK220	E.CAPACITOR 16V 22U	1	
C4536-43		ECEA1CPZ100	E.CAPACITOR 16V 10U	8	
D4517		MA153	DIODE	1	<R>
IC4512,13		AN6558S	IC	2	<R>
IC4514-17		NJM4556MB	IC	4	<R>
P4506		VJP1231R	CONNECTOR(MALE) 4P	1	
P4510		VJP1231G	CONNECTOR(MALE) 4P	1	
P4511		VJP1231R	CONNECTOR(MALE) 4P	1	
P4512		VJP1233T	CONNECTOR(MALE) 6P	1	
P4513		VJP1233R	CONNECTOR(MALE) 6P	1	
P4514		VJP1230T	CONNECTOR(MALE) 3P	1	
Q4510		2SD602	TRANSISTOR CHIP	1	(Q,R,S)<R>
Q4511		2SB710	TRANSISTOR CHIP	1	(Q,R,S)<R>
Q4512		2SD1328	TRANSISTOR	1	<R>
Q4513,14		2SD601	TRANSISTOR CHIP	2	(Q,R,S)<R>
Q4515-18		2SD1328	TRANSISTOR	4	<R>
Q4519,20		2SD601	TRANSISTOR CHIP	2	(Q,R,S)<R>
Q4521-24		2SD1328	TRANSISTOR	4	<R>
Q4525,26		2SD601	TRANSISTOR CHIP	2	(Q,R,S)<R>
Q4527-30		2SD1328	TRANSISTOR	4	<R>
Q4531,32		2SD601	TRANSISTOR CHIP	2	(Q,R,S)<R>
Q4533		2SD1328	TRANSISTOR	1	<R>
Q4534,35		2SD1328	TRANSISTOR	2	<R>
Q4536		2SB709	TRANSISTOR CHIP	1	(Q,R,S)<R>
R4596,97		ERJ6GEYJ151	M.RESISTOR CH 1/10W 150	2	
R4598		ERJ6GEYJ103	M.RESISTOR CH 1/10W 10K	1	
R4599		ERJ6GEYJ182	M.RESISTOR CH 1/10W 1.8K	1	
R4600		ERJ6GEYJ822	M.RESISTOR CH 1/10W 8.2K	1	
R4601		ERJ6GEYJ183	M.RESISTOR CH 1/10W 180K	1	
R4602		ERJ6GEYJ472	M.RESISTOR CH 1/10W 4.7K	1	
R4603-05		ERJ6GEYJ103	M.RESISTOR CH 1/10W 10K	3	
R4606		ERJ6GEYJ152	M.RESISTOR CH 1/10W 1.5K	1	
R4607		ERJ6GEYJ332	M.RESISTOR CH 1/10W 3.3K	1	
R4608		ERJ6GEYJ473	M.RESISTOR CH 1/10W 47K	1	
R4609		ERJ6GEYJ332	M.RESISTOR CH 1/10W 3.3K	1	
R4610		ERJ6GEYJ822	M.RESISTOR CH 1/10W 8.2K	1	
R4611		ERJ6GEYG912	M.RESISTOR CH 1/10W 9.1K	1	

Ref.No.		Part No.	Part Name & Description	Pcs	Remarks
R4612		ERJ6GEYJ470	M.RESISTOR CH 1/10W 47	1	
R4613,14		ERJ6GEYJ332	M.RESISTOR CH 1/10W 3.3K	2	
R4615		ERJ6GEYJ822	M.RESISTOR CH 1/10W 8.2K	1	
R4616		ERJ6GEYJ562	M.RESISTOR CH 1/10W 5.6K	1	
R4617		ERJ6GEYJ102	M.RESISTOR CH 1/10W 1K	1	
R4618		ERJ6GEYJ470	M.RESISTOR CH 1/10W 47	1	
R4619-24		ERJ6GEYJ103	M.RESISTOR CH 1/10W 10K	6	
R4625		ERJ6GEYJ182	M.RESISTOR CH 1/10W 1.8K	1	
R4626		ERJ6GEYJ822	M.RESISTOR CH 1/10W 8.2K	1	
R4627		ERJ6GEYJ183	M.RESISTOR CH 1/10W 180K	1	
R4628		ERJ6GEYJ472	M.RESISTOR CH 1/10W 4.7K	1	
R4629-31		ERJ6GEYJ103	M.RESISTOR CH 1/10W 10K	3	
R4632		ERJ6GEYJ152	M.RESISTOR CH 1/10W 1.5K	1	
R4633		ERJ6GEYJ473	M.RESISTOR CH 1/10W 47K	1	
R4634,35		ERJ6GEYJ332	M.RESISTOR CH 1/10W 3.3K	2	
R4636		ERJ6GEYJ822	M.RESISTOR CH 1/10W 8.2K	1	
R4637		ERJ6GEYJ470	M.RESISTOR CH 1/10W 47	1	
R4638		ERJ6GEYG912	M.RESISTOR CH 1/10W 9.1K	1	
R4639,40		ERJ6GEYJ332	M.RESISTOR CH 1/10W 3.3K	2	
R4641		ERJ6GEYJ822	M.RESISTOR CH 1/10W 8.2K	1	
R4642		ERJ6GEYJ562	M.RESISTOR CH 1/10W 5.6K	1	
R4643		ERJ6GEYJ102	M.RESISTOR CH 1/10W 1K	1	
R4644		ERJ6GEYJ470	M.RESISTOR CH 1/10W 47	1	
R4645-50		ERJ6GEYJ103	M.RESISTOR CH 1/10W 10K	6	
R4651		ERJ6GEYJ182	M.RESISTOR CH 1/10W 1.8K	1	
R4652		ERJ6GEYJ822	M.RESISTOR CH 1/10W 8.2K	1	
R4653		ERJ6GEYJ183	M.RESISTOR CH 1/10W 180K	1	
R4654		ERJ6GEYJ472	M.RESISTOR CH 1/10W 4.7K	1	
R4655-57		ERJ6GEYJ103	M.RESISTOR CH 1/10W 10K	3	
R4658		ERJ6GEYJ152	M.RESISTOR CH 1/10W 1.5K	1	
R4659		ERJ6GEYJ473	M.RESISTOR CH 1/10W 47K	1	
R4660,61		ERJ6GEYJ332	M.RESISTOR CH 1/10W 3.3K	2	
R4662		ERJ6GEYJ822	M.RESISTOR CH 1/10W 8.2K	1	
R4663		ERJ6GEYJ470	M.RESISTOR CH 1/10W 47	1	
R4664,65		ERJ6GEYJ332	M.RESISTOR CH 1/10W 3.3K	2	
R4666		ERJ6GEYJ562	M.RESISTOR CH 1/10W 5.6K	1	
R4667		ERJ6GEYJ102	M.RESISTOR CH 1/10W 1K	1	
R4668		ERJ6GEYJ103	M.RESISTOR CH 1/10W 10K	1	
R4669		ERJ6GEYJ822	M.RESISTOR CH 1/10W 8.2K	1	
R4670		ERJ6GEYJ470	M.RESISTOR CH 1/10W 47	1	
R4671		ERJ6GEYJ103	M.RESISTOR CH 1/10W 10K	1	
R4672		ERJ6GEYG912	M.RESISTOR CH 1/10W 9.1K	1	
R4673-76		ERJ6GEYJ103	M.RESISTOR CH 1/10W 10K	4	
R4677		ERJ6GEYJ182	M.RESISTOR CH 1/10W 1.8K	1	
R4678		ERJ6GEYJ822	M.RESISTOR CH 1/10W 8.2K	1	
R4679		ERJ6GEYJ183	M.RESISTOR CH 1/10W 180K	1	
R4680		ERJ6GEYJ472	M.RESISTOR CH 1/10W 4.7K	1	
R4681-83		ERJ6GEYJ103	M.RESISTOR CH 1/10W 10K	3	
R4684		ERJ6GEYJ152	M.RESISTOR CH 1/10W 1.5K	1	
R4685		ERJ6GEYJ473	M.RESISTOR CH 1/10W 47K	1	
R4686,87		ERJ6GEYJ332	M.RESISTOR CH 1/10W 3.3K	2	
R4688		ERJ6GEYJ822	M.RESISTOR CH 1/10W 8.2K	1	
R4689		ERJ6GEYG912	M.RESISTOR CH 1/10W 9.1K	1	
R4690		ERJ6GEYJ470	M.RESISTOR CH 1/10W 47	1	
R4691,92		ERJ6GEYJ332	M.RESISTOR CH 1/10W 3.3K	2	
R4693		ERJ6GEYJ822	M.RESISTOR CH 1/10W 8.2K	1	
R4694		ERJ6GEYJ562	M.RESISTOR CH 1/10W 5.6K	1	
R4695		ERJ6GEYJ102	M.RESISTOR CH 1/10W 1K	1	
R4696		ERJ6GEYJ470	M.RESISTOR CH 1/10W 47	1	
R4697-01		ERJ6GEYJ103	M.RESISTOR CH 1/10W 10K	5	
R4702,03		ERJ6GEYJ473	M.RESISTOR CH 1/10W 47K	2	
R4704		ERJ6GEYJ104	M.RESISTOR CH 1/10W 100K	1	
R4705		ERJ6GEYJ563	M.RESISTOR CH 1/10W 56K	1	
SW4503		ESD14339	SWITCH	1	<R>
VR4505-08		EVN32CA00B53	V.RESISTOR 5K	4	
			MISCELLANEOUS		

Ref.No.		Part No.	Part Name & Description	Pcs	Remarks
E103		VMX1539	HINGE	2	
	■	VEP06426D	FRONT PANEL C.B.A.		
C6304,05		ECEA1CPZ100	E.CAPACITOR 16V 10U	2	
P6302		VJP1244R	CONNECTOR(MALE) 4P	1	
P6303		VJP1244G	CONNECTOR(MALE) 4P	1	
P6304		VJP1244T	CONNECTOR(MALE) 4P	1	
P6305		VJP1246T	CONNECTOR(MALE) 6P	1	
P6306		VJP1242R	CONNECTOR(MALE) 2P	1	
P6309		VJP1242G	CONNECTOR(MALE) 2P	1	
P6313		VJP1242B	CONNECTOR(MALE) 2P	1	
VR6301-04		EVN38CA00B14	V.RESISTOR 10K	4	
VR6305-08		EVJL3AP20B14	V.RESISTOR 10K	4	
VR6310		EVJL3AP20B15	V.RESISTOR 100K	1	
			MISCELLANEOUS		
E80		VMP0913	VR PANEL	1	
E91		VJF0108	RIVET	2	
E99		VSC2857	SHIELD PLATE	1	
	■	VEP00J60A	EJECT C.B.A.		
D6971-73		LN31GCPHLG3	DIODE	3	<R>
D6974		LN41YCPHLM	LED	1	<R>
D6975,76		LN31GCPHLG3	DIODE	2	<R>
R6971-74		ERDS2TJ220	C.RESISTOR 1/4W 22	4	
SW6971		EVQQJ104K	SWITCH	1	<R>
			MISCELLANEOUS		
E82		VMX0473	LED HOLDER	4	
E83		VGF0240	LED HOLDER	1	
	■	VEP00G66A	MATER C.B.A.		
C6311		ECEA1CK100	E.CAPACITOR 16V 10U	1	
D6311-25		LN440YCPUVT	DIODE	15	<R>
P6307		VJP1875T	CONNECTOR(MALE) 4P	1	

Ref.No.		Part No.	Part Name & Description	Pcs	Remarks
P6310,11		VJP1873T	CONNECTOR(MALE) 2P	2	
R6311-13		ERDS2TJ471	C.RESISTOR 1/4W 470	3	
R6314-16		ERDS2TJ331	C.RESISTOR 1/4W 330	3	
			MISCELLANEOUS		
E84		VGF0185	METER HOLDER	3	
	■	VEK3381	FRONT CONNECTION C.B.A.		
P6801		VJP1231T	CONNECTOR 4P	1	
P6802		VJP1237T	CONNECTOR 10P	1	
P6803		VJP1231B	CONNECTOR 4P	1	
P6804		VJP1229B	CONNECTOR 2P	1	
P6805		VJP1229T	CONNECTOR 2P	1	
P6806,07		VJP1230T	CONNECTOR 3P	2	
P6808		VJP1231T	CONNECTOR 4P	1	
P6809,10		VJP1229T	CONNECTOR 2P	1	
P6811		VJP1229T	CONNECTOR 2P	1	
P6812		VJP1229B	CONNECTOR 2P	1	
P6813		VJP1229T	CONNECTOR 2P	1	
	■	VEP06565A	KEY BOARD C.B.A.		
C6901		ECEA0JU102	E.CAPACITOR 6.3V 1000U	1	
C6903,04		ECCF1H680JC	C.CAPACITOR 50V 68P	2	
C6905,06		ECEA0JU102	E.CAPACITOR 6.3V 1000U	2	
C6907		ECQB1H472JH	P.CAPACITOR 50V 4700P	1	
C6908		ECEA1HK100	E.CAPACITOR 50V 10U	1	
C6909,10		ECEA0JU102	E.CAPACITOR 6.3V 1000U	2	
D6901,02		MA165	DIODE	2	<R>
D6903		MA166	DIODE	1	<R>
D6904		MA4091	DIODE	1	<R>
D6905		MA4330	DIODE	1	<R>
D6906,07		MA165	DIODE	2	<R>
D6910-13		MA165	DIODE	4	<R>
D6922		MA165	DIODE	1	<R>
D6924-33		MA165	DIODE	10	<R>
D6935		MA165	DIODE	1	<R>
D6936,37		LN440YCPUVT	DIODE	2	<R>
D6939-41		LN31GCPHLG3	DIODE	3	<R>
FL6901		VSL0081	DISPLAY TUBE	1	<R>
IC6901		UPC339C	IC	1	<R>
IC6902		UPD1511AC116	IC	1	<R>
IC6903,04		AN6873N	IC	2	<R>
L6901		VLQEL05F100K	COIL 10UH	1	
L6902		VLQ0197	COIL	1	
L6903		VLQ0068	COIL	1	

Ref.No.		Part No.	Part Name & Description	Pcs	Remarks
P6901		VJP1876T	CONNECTOR(MALE) 5P	1	
P6902		VJP1873T	CONNECTOR(MALE) 2P	1	
P6903		VJP1877T	CONNECTOR(MALE) 6P	1	
P6904		VJP1876T	CONNECTOR(MALE) 5P	1	
P6906		VJP1877T	CONNECTOR(MALE) 6P	1	
P6907		VJP1879T	CONNECTOR(MALE) 8P	1	
P6908		VJP1875T	CONNECTOR(MALE) 4P	1	
Q6901		2SC3811	TRANSISTOR	1	(Q,R)<R>
Q6902,03		2SB643	TRANSISTOR	2	(Q,R)<R>
Q6905		2SB643	TRANSISTOR	1	(Q,R)<R>
Q6908,09		2SB643	TRANSISTOR	2	(Q,R)<R>
Q6910		2SD973	TRANSISTOR	1	(S)<R>
Q6911,12		2SD638	TRANSISTOR	2	(R,S)<R>
Q6914-17		2SD638	TRANSISTOR	4	(R,S)<R>
Q6920		2SB643	TRANSISTOR	1	(Q,R)<R>
R6901-03		ERDS2TJ103	C.RESISTOR 1/4W 10K	3	
R6904		ERDS2TJ472	C.RESISTOR 1/4W 4.7K	1	
R6905		ERDS2TJ102	C.RESISTOR 1/4W 1K	1	
R6906		ERDS2TJ224	C.RESISTOR 1/4W 220K	1	
R6907		ERDS2TJ103	C.RESISTOR 1/4W 10K	1	
R6908		ERDS2TJ224	C.RESISTOR 1/4W 220K	1	
R6909		ERDS2TJ103	C.RESISTOR 1/4W 10K	1	
R6910		ERDS2TJ563	C.RESISTOR 1/4W 56K	1	
R6911		ERDS2TJ103	C.RESISTOR 1/4W 10K	1	
R6912		ERDS2TJ563	C.RESISTOR 1/4W 56K	1	
R6913,14		ERDS2TJ103	C.RESISTOR 1/4W 10K	2	
R6915,16		ERDS2TJ821	C.RESISTOR 1/4W 820	2	
R6918		ERDS2TJ821	C.RESISTOR 1/4W 820	1	
R6921,22		ERDS2TJ471	C.RESISTOR 1/4W 470	2	
R6923		ERDS2TJ102	C.RESISTOR 1/4W 1K	1	
R6924		ERDS2TJ470	C.RESISTOR 1/4W 47	1	
R6925,26		ERDS2TJ390	C.RESISTOR 1/4W 39	2	
R6930		ERDS2TJ103	C.RESISTOR 1/4W 10K	1	
R6931		ERDS2TJ180	C.RESISTOR 1/4W 18	1	
R6932,33		ERDS2TJ220	C.RESISTOR 1/4W 22	2	
R6934		ERDS2TJ390	C.RESISTOR 1/4W 39	1	
R6936-38		ERDS2TJ103	C.RESISTOR 1/4W 10K	3	
R6946		ERDS2TJ223	C.RESISTOR 1/4W 22K	1	
R6947,48		ERDS2TJ333	C.RESISTOR 1/4W 33K	2	
R6949-53		ERDS2TJ102	C.RESISTOR 1/4W 1K	5	
R6955		ERDS2TJ102	C.RESISTOR 1/4W 1K	1	
R6956		ERDS2TJ821	C.RESISTOR 1/4W 820	1	
RA6901		EXBP84472J	RESISTOR&RESISTOR 4.7K	1	
RA6902		EXBP84333J	RESISTOR&RESISTOR 33K	1	
RA6903		EXBP88152J	COMBI R-R	1	
SW6901		VSP0213	SWITCH	1	<R>
SW6902		VSP0198	SWITCH	1	<R>
SW6905		VSP0195	SWITCH	1	<R>
SW6906		VSP0196	SWITCH	1	<R>
SW6907		VSP0197	SWITCH	1	<R>
SW6908		VSP0193	SWITCH	1	<R>
SW6920		EVQQJ104K	SWITCH	1	<R>
SW6921		VSS0119	SWITCH	1	<R>
SW6922		ESD14185	SWITCH	1	<R>
SW6923		ESD14184	SWITCH	1	<R>
SW6926		ESD14184	SWITCH	1	<R>
T6901		VLT0275	TRANSFORMER	1	

Ref.No.		Part No.	Part Name & Description	Pcs	Remarks
X6901		VSX0128	CRYSTAL OSCILLATOR	1	<R>
			MISCELLANEOUS		
E74		VJF0344	DISPLAY TUBE HOLDER (R)	1	
E75		VJF0345	DISPLAY TUBE HOLDER (L)	1	
E76		KL04	LED SPACER	2	
E78		VMX0473	LED SPACER	2	
	■	VEP00N83A	POCKET SW C.B.A.		
SW6681-84		VSS0126	SWITCH	4	<R>
SW6685		VSS0127	SWITCH	1	<R>
	■	VEP06519A	34P CONNECTOR C.B.A.		
P6404		VJS1822	CONNECTOR(FEMALE) 3P	1	
P6409		VJS1327	CONNECTOR(FEMALE)	1	
			MISCELLANEOUS		
E93		VMX0674	34P SPACER	1	
	■	VEP00L91B	INPUT JACK C.B.A.		
P6402		VJP1243T	CONNECTOR(MALE) 3P	1	
P6403		VJP1245T	CONNECTOR(MALE) 5P	1	
P6404		VJP1243G	CONNECTOR(MALE) 3P	1	
P6407		VJP1244T	CONNECTOR(MALE) 4P	1	
R6406		ERDS2TJ750	C.RESISTOR 1/4W 75	1	
SW6401		VES0244	SWITCH	1	<R>
SW6402,03		ESD14339	SWITCH	2	<R>
	■	VEP00L92B	OUTPUT JACK C.B.A.		
C6501		ECEA1CPK470	E.CAPACITOR 16V 47U	1	
P6501		VJP1243R	CONNECTOR(MALE) 3P	1	
P6502		VJP1243G	CONNECTOR(MALE) 3P	1	
P6504		VJP1243B	CONNECTOR(MALE) 3P	1	
P6505		VJP1247T	CONNECTOR(MALE) 7P	1	
P6506		VJP1243T	CONNECTOR(MALE) 3P	1	
P6507		VJP1247T	CONNECTOR(MALE) 7P	1	

Ref.No.		Part No.	Part Name & Description	Pcs	Remarks
P6508		VJP1243T	CONNECTOR(MALE) 3P	1	
Q6501		2SD1330	TRANSISTOR	1	(S,T)<R>
R6501		ERDS2TJ563	C.RESISTOR 1/4W 56K	1	
R6502		ERDS2TJ561	C.RESISTOR 1/4W 560	1	
R6503		ERDS2TJ103	C.RESISTOR 1/4W 10K	1	
R6504-06		ERDS2TJ750	C.RESISTOR 1/4W 75	3	
	■	VEP00L94A	S-VIDEO OUTPUT C.B.A.		
J6450		VJS2579	CONNECTOR(FEMALE) 4P	1	
P6450		VJP1244T	CONNECTOR(MALE) 4P	1	
	■	VEP00L97A	CAP OVERLIDE C.B.A.		
P6408		VJP1243T	CONNECTOR(MALE) 3P	1	
	■	VEK3849	LAMP C.B.A.		
			MISCELLANEOUS		
E85		VLL0019	LAMP	2	<R>
	■	VEK3848	PHOTO TR UNIT		
E86		ECKW1H102KBN	C.CAPACITOR 50V 1000P	1	
E87		PN150NV	PHOTO TRANSISTOR	1	<R>
			MISCELLANEOUS		
E88		VMD0091	PHOTO TR HOLDER	1	<R>
	■	VEK3832	PRESSURE ROLLER SOLENOID		
			CONNECTOR C.B.A.		
P6701		VJP1232R	CONNECTOR(MALE) 5P	1	
P6702		VJP1231B	CONNECTOR(MALE) 4P	1	
P6703		VJP1233T	CONNECTOR(MALE) 6P	1	
P6704		VJP1230T	CONNECTOR(MALE) 3P	1	
P6705		VJP1233R	CONNECTOR(MALE) 6P	1	
P6706		VJP1148	CONNECTOR(MALE) 2P	1	
P6707		VJP1229B	CONNECTOR(MALE) 2P	1	

Ref.No.		Part No.	Part Name & Description	Pcs	Remarks
	■	VEM0256	ELEVATOR MOTOR UNIT		
P6511		VJP1245T	CONNECTOR(MALE) 5P	1	
P6512		VJP1242R	CONNECTOR(MALE) 2P	1	
P6513		VJP1242T	CONNECTOR(MALE) 2P	1	
			MISCELLANEOUS		
E89		MXN12AE10C	MOTOR	1	<!><R>
E90		VMA6848	ANGLE	1	